Optimization and Control of Ozone Use within Recirculating Aquaculture Systems

by

Matthew Trueman

B.Sc. Chemical Engineering, University of New Brunswick, 2015

A Thesis Submitted in Partial Fulfillment
of the Requirements for the Degree of

Master of Science in Engineering

in the Graduate Academic Unit of Chemical Engineering

Supervisor: M. Couturier, Ph.D., Chemical Engineering

Examining Board: G. Bendrich, Ph.D., Chemical Engineering
F. Chibante, Ph.D., Chemical Engineering
K. Singh, Ph.D., Chemical/Civil Engineering

This thesis is accepted by the
Dean of Graduate Studies

THE UNIVERSITY OF NEW BRUNSWICK

May, 2017

ABSTRACT

This research focuses on the development of a centralized ozone treatment system for improving water quality in recirculating aquaculture systems (RAS). The ozone system was tested in a commercial salmon smolt hatchery. An experimental reactor was also constructed to evaluate the effects of ozone on water quality and determine the reaction kinetics of ozone in RAS. Ozone treatment improves water quality by oxidizing dissolved organic compounds, which leads to lower refractory COD concentrations, improvement in UV light transmittance, and clear water. In addition, the reaction between ozone and the dissolved organic matter is nearly instantaneous. Based on these findings, a steady state model for the production and destruction of UV absorbing compounds was used to confirm that ozone dosing should not exceed 21.9 ± 2.8 g O_3/kg feed to avoid ozone residuals. Finally, a control strategy is outlined which utilizes an ozone side-loop to infer the ozone demand within the RAS.

ACKNOWLEDGEMENTS

I am grateful to all of those with whom I have had the pleasure to work with during this project. I would especially like to thank my supervisor, Dr. Michel Couturier, as without his support and counsel this research project would not have been possible. His guidance and coaching throughout the completion of my graduate studies were invaluable.

This work would not have been possible without the financial support of Cooke Aquaculture and the Mitacs program. I am indebted to the staff of Cooke Aquaculture and Sorensen Engineering, who worked actively to help support the project.

Finally, I would like to thank my family and friends who supported me throughout the duration of this project.

Table of Contents

List of Tables

List of Figures

List of Symbols, Nomenclature or Abbreviations

List of Abbreviations

BCH – Buckmans Creek Hatchery

BGD – Bacterial Gill Disease

BOD – Biochemical Oxygen Demand (mg/L)

COD – Chemical Oxygen Demand (mg/L)

CME – Color Mass Equivalent

DO – Dissolved Oxygen (mg/L)

DOC – Dissolved Organic Carbon (mg/L)

IOD – Instantaneous Ozone Demand (mg/L)

LPM – Liters Per Minute

NOM – Natural Organic Matter

ORP – Oxidation-Reduction Potential (mV)

PVC – Polyvinyl Chloride

RAS – Recirculating Aquaculture System

TOC – Total Organic Carbon (mg/L)

UVA – Ultra-Violet Light Absorbance

UVT – Ultra-Violet Light Transmittance (%)

List of Symbols

a is the UV absorbing compound generation coefficient (g/kg)

a_{oxi} is the activity of the oxidizing chemical

a_{red} is the activity of the reducing chemical

b is the coefficient for the destruction of UV absorbing compounds by ozone (g/g O_3)

$C_{O_3entrance}$ is the concentration of ozone in the ozonated flow entering the reactor (g/L)

$C_{O_3initial}$ is the initial concentration of ozone in the experimental reactor (g/L)

$C_{O_{3ip}}$ is the initial ozone concentration entering the experimental reactor (g/L)

C_{O_3m} is the concentration of ozone measured by the ozone monitor (g/L)

C_{O_3o} is the residual ozone concentration in the ozonated water (g/L)

C_{O_3SP} is the desired concentration of ozone measured at the dissolved ozone monitor (g/L)

C_{UV} is the concentration of ultraviolet light absorbing compounds in the water sample (g/L)

C_{UVf} is the final concentration of UV absorbing compounds exiting the culture tanks (g/L)

C_{UVi} is the initial concentration of UV absorbing compounds entering the culture tanks (g/L)

C_{UVip} is the initial concentration of UV absorbing compounds entering the experimental reactor (g/L)

C_{UVO3} is the concentration of UV absorbing compounds in the ozonated water (g/L)

C_{UVS} is the concentration of UV absorbing compounds in the system water (g/L)

D_{O_3} is the instantaneous ozone demand (g/L)

ε is the molar absorptivity of the organic compounds in the water sample (L/g·cm)

E is the measured potential (V)

E^o is the potential under standard conditions of concentration and temperature (V)

F is the feed rate entering the system (kg/s)

F_a is the Faraday constant (C/mol)

l is the length of the ultraviolet light transmittance cell containing the water sample being measured (cm)

$\dot{m}_{O_3}$ is the mass flow rate of ozone being injected into the system (g/s)

$Q_{combinedflow}$ is the total combined flow (L/s)

Q_m is the make-up water flow rate (same as effluent water flowrate) (L/s)

Q_{O_3} is the flow rate of ozonated water to the experimental reactor (L/s)

$Q_{ozonatedflow}$ is the ozonated water flow entering the reactor (L/s)

Q_{recirc} is the recirculation flow of the system (L/s)

Q_s is the system water flowrate of the full-scale system (L/s)

Q_{SP} is the flow rate of system water entering the experimental reactor (L/s)

Q_{TP} is the total flow rate of water passing through the experimental reactor (L/s)

Q_u is the flow rate of untreated water entering the ozone side-loop (L/s)

R is the universal gas constant (J/mol·K)

T is absolute temperature (K)

UVA is the ultraviolet light absorbance of the water sample

Y is the fraction of UV absorbing compounds which react with ozone

z is the number of exchanged electrons in the redox reaction

Chapter 1 – Introduction

1.1 The Rise of Aquaculture

Aquaculture is the farming of aquatic organisms under controlled conditions, in both freshwater and saltwater environments. Aquatic organisms cultivated through aquaculture include fish, crustaceans, mollusks and aquatic plants. Fish "farming" is carried out in aquaculture systems which include: pond culture, sea cages, flow through systems, and recirculating aquaculture systems. As the global demand for fish increases, more pressure is being placed on the aquaculture industry to supplement wild fish stocks.

By 2025, the global annual demand for fish is estimated to hit 196 million tonnes; with 52% of all seafood and fish products originating from aquaculture. On a sustainable basis, marine capture fisheries are only expected to provide 94 million tonnes per year. The consequence is that increased demand for seafood products will be met by growth in aquaculture production: a roughly 26% growth in production from aquaculture is expected to satisfy global demand. This will bring total aquaculture production to 102 million tonnes by 2025, which will exceed capture fishery production. Based on these predictions, aquaculture will become the primary driver of change in the fisheries and aquaculture sector and remain one of the fastest-growing sectors in animal food production (Food and Agriculture Organization of the United Nations, 2016).

1.2 Recirculating Aquaculture Systems

Recirculating aquaculture systems (RAS) are indoor, tank based systems which allow aquaculturalists to raise fish in controlled environmental conditions. RAS treat the water

exiting the fish culture tanks, so that it can be reintroduced into the system. These systems provide several advantages over their aquaculture counterparts: reduced water usage, higher stocking densities, lower effluent volume, flexible site selection, and increased biosecurity. Unfortunately, the disadvantages are a higher initial investment for infrastructure and higher operating costs. However, improvements continue to be made to increase stocking density and reduce environmental impacts which are leading to more cost-effective RAS (Rawlinson & Forster, 2000).

Various water treatment procedures must be carried out to maintain a healthy water environment that maximizes fish health and maturation. The following critical water quality parameters must be controlled: temperature, pH, alkalinity and the concentrations of suspended solids, dissolved oxygen, ammonia, nitrite, nitrate, and carbon dioxide. Typically, the major processes found within an RAS are solids removal, biofiltration, oxygenation, and degasification. A variety of methods and equipment exist which can accomplish each treatment process.

Figure 1-1 is a typical block flow diagram for RAS, which are normally considered to be semi-closed loop processes with minimal water exchange. The small amount of water being exchanged is used to remove constituents in the water which would otherwise accumulate within the system because none of the water treatment processes facilitate their removal.

Solids accumulate in the system from fish fecal matter and uneaten or partially eaten feed. A high level of organic matter can harbor pathogens, lead to fish gill irritation, inhibit nitrification, and create unwanted oxygen demand (Timmons & Losordo, 1994). Solids are classified as either settleable solids (>100 μm), suspended solids (100-1 μm), or dissolved

solids (Timmons, Ebeling, Wheaton, Summerfelt, & Vinci, 2007). As particles become smaller from physical agitation within the system, they become more difficult to remove and fine particles can accumulate. For this reason, solids removal equipment is located immediately after the fish culture tanks to minimize particle break down. Even at peak efficiency, 100% solids removal cannot be reached.

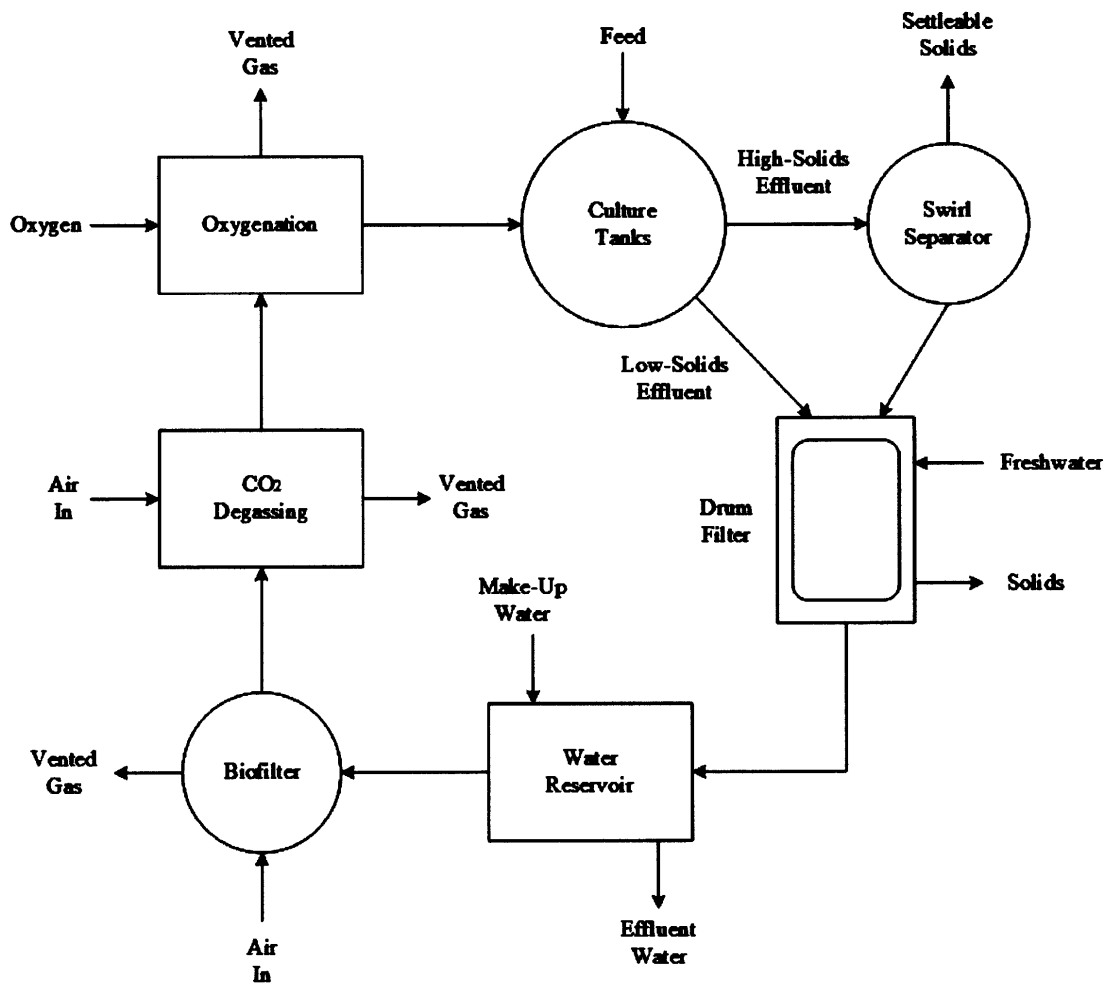

Figure 1-1: Basic Recirculating Aquaculture System Block Flow Diagram

Normally, culture tanks have two drains: a side wall drain and a bottom drain. The bottom drain flow has a higher concentration of solids because it removes the settleable

solids. For this reason, the bottom drain flow is sent to a swirl separator for suspended solids removal through sedimentation, before being sent to the drum filter. The top water typically has a much smaller concentration of solids and can be sent to the drum filter directly. The drum filter is a microscreen filter which can remove small particles that could not be removed by gravity. The size of particles that can be removed depends on the selected size of the screen opening (ranges from 40 to 100 microns) (Timmons, Ebeling, Wheaton, Summerfelt, & Vinci, 2007).

After solids removal, the recirculated flow continues to biofiltration. In this process, the ammonia-nitrogen contaminants undergo bacterial driven nitrification. The primary source of ammonia is the urea rejected by the fish. Nitrification is the process by which ammonia is first oxidized to nitrite and then to nitrate in sequential reactions. This process occurs through oxidation by *Nitrosomonas* and *Nitrobacter* in the following reactions (Ebeling & Timmons, 2012):

Nitrosomonas:

$$NH_4^+ + 1.5O_2 \rightarrow NO_2^- + 2H^+ + H_2O \quad (1)$$

Nitrobacter:

$$NO_2^- + 0.5O_2 \rightarrow NO_3^- \quad (2)$$

Overall:

$$NH_4^+ + 2O_2 \rightarrow NO_3^- + 2H^+ + H_2O \quad (3)$$

The decomposition of nitrogenous compounds is of crucial importance in RAS due to the comparative toxicity of ammonia, nitrite, and to a minor extent nitrate. Fish can tolerate

much higher concentrations of nitrate within the system; therefore, nitrate is typically removed from the system through water exchange and denitrification is unnecessary.

Before returning to the fish tanks, the water must be reoxygenated due to the consumption of dissolved oxygen by bacterial activity in the biofilter and cultured fish. Most aquaculture species require a minimum dissolved oxygen (DO) concentration of 4 to 6 mg/L for optimal growth and survival. Typically, direct oxygen injection is used to increase the DO concentration in RAS.

Carbon dioxide concentrations in the system water increase due to bacterial activity and fish respiration. An elevated concentration of carbon dioxide can limit the respiration of fish; by reducing the blood's ability to transport oxygen through the Bohr effect. It can also lower the system pH, which can stress the fish and inhibit nitrifying bacteria. Dissolved carbon dioxide concentrations of 20 mg/L can begin to affect sensitive species of fish (Wedemeyer, 1996). At low stocking densities, carbon dioxide removal is sufficient from physical agitation and water exposure to air. However, intensive system production may be limited by excessive carbon dioxide levels and require degasification. Normally, a degassing stack is used to contact air and water containing an elevated carbon dioxide concentration, which removes the carbon dioxide through gas transfer (Ebeling & Timmons, 2012).

Finally, although not directly controlled by dedicated treatment equipment, pH and hardness also play a crucial role in maximizing production in RAS. The optimum pH and hardness for the growth of freshwater aquatic animals is within the range of 6.5 to 9.0 and 20 to 300 mg/L, respectively. An exposure to extreme pH can be stressful or even lethal to aquatic animals. The indirect effects of a pH change are also very important because it

controls a wide variety of equilibria reactions. Typically, the groundwater or surface water entering the RAS is buffered by the bicarbonate-carbonate system (Timmons M. B., Ebeling, Wheaton, Summerfelt, & Vinci, 2001). However, chemical addition is often required to maintain pH and hardness. In the RAS studied in this project, sodium hydroxide ($NaOH$) is added to control pH and calcium chloride ($CaCl_2$) is added to control hardness.

These water quality treatment processes often represent the base of a train of processes contained within recirculating aquaculture systems. However, as stocking densities increase and more demand is placed on the system, further development and innovative process additions to RAS water treatment process trains are required to maintain adequate water quality.

1.3 Ozone Treatment

Ozone (O_3) is a strong oxidant and unstable gas, which must be produced at the point of use. It is highly reactive and is applied to oxidize compounds directly or indirectly via hydroxyl radicals (Gottschalk, Libra, & Saupe, 2010). In aquaculture, ozone is used to improve water quality by acting as a disinfectant, microflocculating fine particulate matter, oxidizing non-biodegradable organic molecules and nitrite (Summerfelt, Hankins, Weber, & Durant, 1997). To react with the target compounds in water, ozone must be transferred into the water via a gas-liquid contactor.

Microscreen filters are often unable to remove dissolved and colloidal organic matter which can inhibit nitrification and lead to unwanted oxygen demand. Ozone can precipitate dissolved organic matter and microflocculate colloidal organic matter to enhance organic

removal in the system (Summerfelt, Hankins, Weber, & Durant, 1997). In addition, ozone reacts rapidly and creates oxygen as a final by-product.

In the past, the most common use of ozone has been to disinfect incoming water supplies to eliminate pathogens (Bullock, et al., 1997). However, ozone use within recirculating aquaculture systems as a supportive water treatment technique is also prominent. Through the addition of ozone treatment, water quality can be improved by reducing the concentrations of suspended solids and refractory dissolved organic carbon in the system. This creates an environment which is less favorable for bacterial growth and can lead to increased productivity through improvement in fish health and survivability.

The key difference between using ozone for disinfection and water quality improvement is the required dosage. During ozone disinfection, the goal is to provide a high enough concentration over time to enable bacteria reduction. Therefore, a residual ozone concentration must be maintained for an extended period and the ozone demand of the water must be overcome. Ideally, ozone disinfection is implemented in very clean water to avoid significant ozone demand and is often used to treat the inlet water entering the system. In addition, a method of ozone destruction must be present after the contact tanks to ensure no residual ozone continues flowing through the system (Summerfelt, Sharrer, Tsukuda, & Gearheart, 2009).

In this research, the focus is to use ozone treatment as a method to improve water quality in RAS. In contrast to disinfection, an ozone residual is undesirable in this application and ozone is dosed to match the demand of the system water. Ozone treatment will be implemented within the recirculation loop to continuously treat the system water.

The goal will be to match the ozone dosage with the ozone demand of the system throughout the fish production cycles.

1.4 Objectives

The goal of this research was to improve the use of ozone treatment within recirculating aquaculture systems. To achieve this goal, the research was split into several objectives which focused on optimal operating conditions, ozone system implementation, and process control. The objectives were the following:

a) Develop a new central method for the addition of ozone at the Buckmans Creek hatchery owned by Cooke Aquaculture.
b) Determine the reaction kinetics of ozone consumption in a recirculating aquaculture system.
c) Evaluate the applicability of literature ozone dosage guidelines within the Buckmans Creek hatchery.
d) Establish a correlation between UV light transmittance and biochemical oxygen demand (BOD), chemical oxygen demand (COD) or dissolved organic carbon (DOC).
e) Develop a system for the automatic control of ozone addition, using a dissolved ozone concentration monitor.

Chapter 2 – Literature Review

2.1 Ozone Reaction Mechanisms

Ozone oxidation chemistry is very complex, as many chemical reactions occur simultaneously. Ozone can either react directly with organic matter or produce hydroxyl radicals, which then react with organic matter. Ozone and hydroxyl radicals are two of the strongest chemical oxidants (Gottschalk, Libra, & Saupe, 2009). Both the direct and indirect reaction pathways are oxidation reactions which produce different oxidation products and are controlled by separate types of reaction kinetics. In acidic conditions (pH < 4), the direct reaction path becomes more important, while in basic conditions (pH = 10) the indirect pathway can play a more prominent role. The direct pathway can also be important if the water does not contain compounds which initiate the chain reaction required for the indirect mechanism or if it contains scavengers which impede the chain reaction (Beltrán, Encinar, & García-Araya, 1993).

2.1.1 Direct Reaction

The direct oxidation of organic matter by ozone is selective and the rate of the oxidation reaction can vary significantly (typical range of $k = 1\text{-}10^6\ M^{-1}s^{-1}$) (Gottschalk, Libra, & Saupe, 2009). However, for oxidation of many organic and inorganic contaminants in wastewater, the kinetics of ozone reactions are favorable (Hoigné & Bader, 1983a). There are three types of ozone reaction mechanisms in solutions containing dissolved organic matter: cyclo addition, electrophilic reactions, and nucleophilic reactions. In cyclo addition, the ozone molecule splits the unsaturated bond of the organic compound because of its dipolar structure. The major pathway of this reaction is based on

the Criegee mechanism (Figure 2-1) (Criegee, 1975) . Typically, ozone reacts faster with organic or inorganic compounds based on their degree of nucleophilicity (reaction rate increases with increasing electron density) (Gottschalk, Libra, & Saupe, 2009). The oxidation reaction is also faster with ionized or dissociated compounds (Von Gunten, 2003).

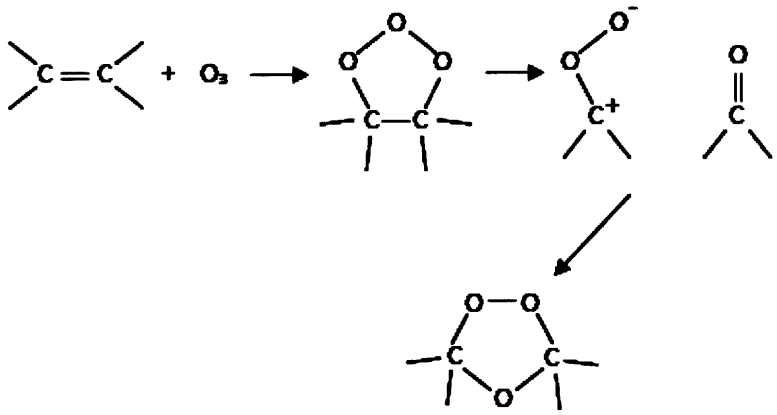

Figure 2-1: Criegee Mechanism (Adapted from (Criegee, 1975))

Ozone reacts quickly with certain types of aromatic and aliphatic compounds which contain electron carrying substituents: the reaction rate is much slower if an electron supplying substituent is not present (Gottschalk, Libra, & Saupe, 2009). For example, Benzene (nonsubstituted aromatic ring, $k_d = 2\ M^{-1}s^{-1}$) has a much slower oxidation rate with ozone in comparison to Phenol (undissociated electron supplying substitutes, $k_d = 1.3 \times 10^3\ M^{-1}s^{-1}$) (Hoigné & Bader, 1983a; Francis, 1987). Inorganic compound reaction rates with ozone can surpass those of organic compounds, however, there is wider variation in oxidation rates for inorganic compounds (12 orders of magnitude) (Von Gunten, 2003).

2.1.2 Indirect Reaction

The focus of the indirect reaction pathway is the hydroxyl radicals, which are molecules that have an unpaired electron. These molecules are unstable and undergo immediate reactions to obtain the missing electron. The major reactions and reaction products of the hydroxyl radical pathway based on two models are discussed below (Staehelin & Hoigné, 1983; Tomiyasu, Fukutomi, & Gordon, 1985). The indirect reaction pathway consists of three steps: initiation, radical chain reaction, and termination. This reaction mechanism is complex and can be influenced by many substances (Gottschalk, Libra, & Saupe, 2009).

The initiation step is a reaction between hydroxide ions and ozone, which generates one superoxide anion and one hydroperoxyl radical. These reaction products are in an acid-base equilibrium.

$$O_3 + OH^- \rightarrow O_2^{o-} + HO_2^o \quad k_1 = 70\ M^{-1}s^{-1} \tag{4}$$

$$HO_2^o \leftrightarrow O_2^{o-} + H^+ \quad pKa = 4.8 \tag{5}$$

After this step, the radical chain reaction begins. The superoxide anion reacts with ozone to form an ozonide anion which immediately decomposes via hydrogen trioxide to a hydroxyl radical.

$$O_3 + O_2^{o-} \rightarrow O_3^{o-} + O_2 \quad k_2 = 1.6\ x\ 10^9\ M^{-1}s^{-1} \tag{6}$$

$$HO_3^o \leftrightarrow O_3^{o-} + H^+ \quad pKa = 6.2 \tag{7}$$

$$HO_3^o \rightarrow OH^o + O_2 \quad k_3 = 1.1\ x\ 10^5\ s^{-1} \tag{8}$$

The hydroxyl radical can then interact with ozone to form HO_4^o, which decays into oxygen and a hydroperoxyl radical through the following reaction sequence:

$$OH^o + O_3 \rightarrow HO_4^o \quad k_4 = 2.0\ x\ 10^9\ M^{-1}s^{-1} \tag{9}$$

$$HO_4^o \rightarrow O_2 + HO_2^o \quad k_5 = 2.8\ x\ 10^4\ s^{-1} \tag{10}$$

With the formation of the new reaction products, the proposed reaction chain can restart. The overall chain reaction consumes two moles of ozone. Please note, this is a proposed reaction pathway and experimental proof of the existence of HO_4^o is still required (Mizuno, Tsuno, & Yamada, 2007).

Any compounds that convert OH^o into superoxide radicals O_2^{o-}/HO_2^o act as promoters in the chain reaction. Organic molecules can also act as promoters: some contain functional groups that react with hydroxyl radicals to form organic radicals.

$$H_2R + OH^o \rightarrow HR^o + H_2O \tag{11}$$

The presence of oxygen can also lead to the formation of organic peroxy radicals:

$$HR^o + O_2 \rightarrow HRO_2^o \tag{12}$$

$$HRO_2^o \rightarrow R + HO_2^o \tag{13}$$

$$HRO_2^o \rightarrow RO + OH^o \tag{14}$$

The final products of these reactions are a hydroperoxyl radical and hydroxyl radical which can re-enter the chain reaction. The chain reaction ends through the termination step: the hydroxyl radical reacts with an organic or inorganic compound which

does not produce superoxide radicals. These compounds are called the reaction inhibitors. They terminate the chain reaction and inhibit ozone decay. For example,

$$OH^o + CO_3^{2-} \rightarrow OH^- + CO_3^{o-} \quad k_6 = 4.2\ x\ 10^8\ M^{-1}s^{-1} \tag{15}$$

$$OH^o + HCO_3^- \rightarrow OH^- + HCO_3^o \quad k_7 = 1.5\ x\ 10^7\ M^{-1}s^{-1} \tag{16}$$

The second possible method to terminate the chain reaction is a reaction between two radicals:

$$OH^o + HO_2^o \rightarrow O_2 + H_2O \quad k_8 = 3.7\ x\ 10^{10}\ M^{-1}s^{-1} \tag{17}$$

If the overall reaction is considered, three ozone molecules produce two hydroxyl radicals:

$$3O_3 + OH^- + H^+ \rightarrow 2OH^o + 4O_2 \tag{18}$$

The hydroxyl radicals produced in this reaction are nonselective and have a very short half-life due to their reactivity. The reaction rate constants for hydroxyl radicals and aromatic compounds have been shown to be close to the diffusion limit, meaning they react on contact (Buxton, Greenstock, Helman, & Ross, 1988).

2.2 Ozone Reaction Kinetics

To effectively use ozone within a recirculating aquaculture system, the consumption rate and reaction kinetics of dissolved ozone within the system must be understood. These parameters will help distinguish the necessary reactor size that provides adequate residence time for ozone consumption and offer valuable information which establishes how the system water interacts with the ozonated water.

Many literature sources have found that ozone consumption occurs through a two-step process in wastewater; an initial instantaneous ozone demand followed by a slow ozone decay (Elovitz & Gunten, 1999; Freese, Nozaic, Smith, & Trollip, 1998; Roustan, Debellefontaine, Do-Quangq, & Duguet, 1998). In addition, the ozone demand of water has been found to be dependent upon the contact time, contactor design, transfer efficiency, applied ozone dosage, and other parameters such as pH, alkalinity, temperature, and the concentration and nature of the organic matter present in the water (Elovitz, Gunten, & Kaiser, 2000; Freese, Nozaic, Smith, & Trollip, 1998).

Roustan et al. (1998) found that the instantaneous ozone demand (IOD) and kinetic decay constant (k) were dependent on both the concentration of dissolved organic carbon and the UV absorbance of the water sample. The dissolved organic carbon was a representation of the total amount of oxidizable compounds in water, while the UV absorbance at 254 nm indicated the level of compounds with double bonds which are involved in fast reactions (IOD). This indicated that the instantaneous ozone demand plays a more important role in ozone consumption in wastewater in comparison to drinking water, because of the higher UV absorbance at 254 nm. Overall, their results indicate that both instantaneous ozone demand (0-5.5 g/m^3) and the ozone decay kinetic constant (0.04-0.48 min^{-1}) can vary significantly depending on the quality of the water being treated.

Elovitz et al. (2000) discovered that the instantaneous ozone demand (IOD) occurring in their experimental trials could account for as much as roughly 50% of the ozone depletion depending on reaction conditions. In addition, their results indicate that ozone depletion rates increase with increasing temperature and can change the behavior of ozone reaction kinetics. A water temperature change from 5°C to 35°C, resulted in an 18-

fold difference in ozone decay rate constant. When water temperature was between 5°C and 15°C, an initial fast reaction (IOD) preceded the principal first order phase. However, at temperatures of 25°C and 35°C, there was little to no distinctive initial phase of ozone depletion. These results also revealed that hydroxyl radical exposure is unaffected by reaction temperature, but ozone exposure changes drastically. This is due to a constant hydroxyl radical yield from ozone consumption coupled with a constant hydroxyl radical scavenging rate.

Elovitz et al. (2000) also conducted experiments which found that the pH and carbonate alkalinity had significant effects on ozone depletion reactions. When pH increased, the rate of ozone depletion increased. This was expected because of the hydroxide initiated ozone depletion reaction and the pH-dependent reactions in the ozone decay chain. However, as previously mentioned, both carbonate and bicarbonate are reaction inhibitors, which scavenge hydroxide radicals and form oxidation products which do not accelerate the decay of ozone. As expected, increasing carbonate alkalinity resulted in a decrease in the rate of ozone depletion.

2.3 Instantaneous Ozone Demand

Emphasis must be placed on the quality of water being treated with ozone as this can have profound effects on the chemical reaction kinetics. As mentioned above, ozone consumption proceeds through a two-step process: instantaneous ozone demand and a slow first order decay. The significance and impact of each step, in ozone consumption, are dependent on the overall quality of the source water being treated. For example, in natural water applications the slow decay of ozone can play a much more significant role in

comparison to the ozone treatment of wastewater which is dominated by the instantaneous ozone demand.

To illustrate this point, a comparison can be made between literature which focused on the ozone treatment of wastewater and natural water. Buffle et al. (2006) defined the instantaneous ozone demand as the ozone consumed before their first measurement (20 seconds) and found that in wastewater (DOC = 4.5-8.5 mg/L) this period consumed the entire initial ozone dosage. Obviously, this finding is dependent on the ratio of ozone dosed to the levels of organic matter within the water. However, this finding applied to all cost-effective doses of ozone attempted in the experiment and indicates that wastewater can exhibit very high instantaneous ozone demands.

In contrast, Shin et al. (2016) found that in raw lake water (DOC = 1.5-1.7 mg/L) the instantaneous ozone demand accounted for between roughly 50-60% of the total ozone consumption and was followed by a slower ozone decay. In addition, an ozone dosage of only 1 mg/L was used during these trials in comparison to dosages of up to 2.6 mg/L ozone in the Buffle et al. (2006) experimental trials.

The major difference between these two types of water is the natural organic matter (NOM) content. It has been found that the instantaneous ozone demand is mainly due to the direct reaction of ozone with dissolved organic matter and is not caused by the indirect hydroxyl radical reaction chain (Cho, 2003; Buffle M.-O. , Schumacher, Meylan, Jekel, & von Gunten, 2006). Therefore, as a "rule of thumb", water which contains a greater concentration of dissolved organic carbon will exert a greater instantaneous ozone demand (IOD). However, the degree of IOD exerted is also dependent on the reactivity of the dissolved compounds with ozone.

2.4 Ozone Treatment – Water Quality Benefits

As previously mentioned, ozonation is being used as a treatment process within recirculating aquaculture systems to improve water quality by acting as a disinfectant, microflocculating fine particulate matter and oxidizing non-biodegradable organic molecules, and nitrite (Summerfelt S. T., Hankins, Weber, & Durant, 1997). Microflocculation, leads to larger particles which can help improve solids removal through filtration. While, oxidation converts non-biodegradable organic compounds into products which are more readily biodegradable (Timmons, Ebeling, Wheaton, Summerfelt, & Vinci, 2001). Under the conditions used in aquaculture, ozone is not able to oxidize organic carbon to carbon dioxide, it only breaks the large organic molecule into smaller molecules (Rice, Robson, Miller, & Hill, 1981)

Summerfelt et al. (1997) found that the addition of ozone reduced the mean concentration of total suspended solids by 35%, chemical oxygen demand by 36%, dissolved organic carbon by 17%, and color by 82% within the system water entering the culture tanks. In addition, ozone also reduced the mean nitrite concentration by 82%. Additionally, it was found that solids removal across the Triangel™ filter used in the experiments improved by 33% and less plugging occurred in the microscreen filter panels.

Bullock et al. (1997) found that ozone could prevent bacterial gill disease (BGD) mortality when it was added to the system at a rate of 0.025 or 0.036-0.039 kg ozone/kg feed. In the control system, chemical treatments were required to eliminate the BGD. However, the ozone addition at this dosage resulted in very low reductions in heterotrophic bacteria due to the short exposure time to residual ozone.

During trials conducted on six replicated recirculating aquaculture systems, Davidson et al. (2011) found that ozone significantly reduced total suspended solids, color, and biochemical oxygen demand and significantly increased ultraviolet light transmittance in the system. In addition, ozone reduced the amount of accumulating metals and total heterotrophic bacteria counts through water quality improvement in near-zero exchange RAS. Overall, ozone treatment created a more optimal water quality environment which increased the performance of the system through better feed conversion and increased survival.

2.5 Ozone Generation

Ozone cannot be stored like other industrial gases (because of its quick decay into oxygen), and must be generated on-site. Figure 2-2, is a schematic of a corona discharge generator. Ozone is generated by converting part of the oxygen feed gas using two electrodes: the high voltage and earth electrode. The oxygen gas flows in a discharge gap between the electrodes and an alternating high voltage is applied to the high voltage electrode. Micro-discharges take place in the discharge gap which dissociate the oxygen molecules. A portion of the freed oxygen atoms then recombines with oxygen molecules to form ozone (Ozonia, 2009).

At the outlet of the generator, a combination of oxygen and ozone gas is released. The percentage of ozone gas in the outlet stream is dependent on the power setting of the machine. In addition, only a portion of the energy applied to the electrodes produces ozone, therefore, the generator also outputs heat. The ozone generation modules must be cooled with water to remove all of the generated excess heat (Ozonia, 2009).

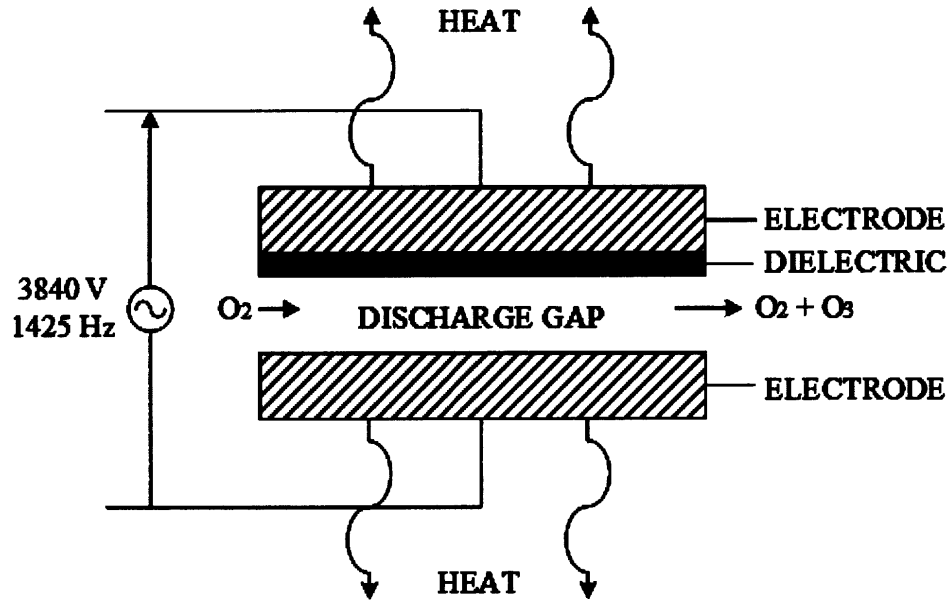

Figure 2-2: Corona Discharge Ozone Generator (Adapted from (Lenntech, 2016))

To prevent damage and ensure optimal operation, ambient environmental conditions must be met during ozone generator operation. The primary environmental conditions of concern are the ambient humidity and temperature. During operation, the average ambient air humidity should be less than 65% and the ambient temperature should remain between 5-40°C (Ozonia, 2009). To control these conditions, the ozone generator should often be installed in a designated room with equipment for humidity and temperature control.

2.6 Ozone Toxicology

When implementing ozone in any application, the primary concern is safety and minimizing risk. Ozone is a highly toxic gas which can have detrimental effects on both fish and hatchery personnel. Possible routes of entry are inhalation, and absorption through the skin or eyes. Ozone concentrations as low as a few tenths of a ppm can cause discomfort

in the form of a headache, coughing, dryness of the throat, and nose irritation. Severe exposures have led to cramping chest pain, body pain, and a choking sensation. A current estimate is that an ozone exposure of 50 ppm for a period of 30 minutes would be fatal. If chronic exposure occurs, more severe symptoms are observed depending on ozone concentration and length of exposure. Observed symptoms include Asthma, allergies, and other respiratory disorders. Ozone is also suspected of having carcinogenic potential (Gottschalk, Libra, & Saupe, 2009).

Currently, the United States Occupational Safety and Health Administration (OSHA) has a permissible ozone exposure limit of 0.1 ppm averaged over an 8-hour work shift (United States Department of Labor, 2017). Ozone-in-air monitors should always be in place to monitor the concentration of ozone. The odor threshold for ozone gas is roughly 0.02 ppm, however, desensitization occurs over time (Gottschalk, Libra, & Saupe, 2009).

Dissolved ozone residual is toxic to salmon and other fish species at very low concentrations. For example, LC_{50}-values (ozone concentration lethal to half of the test animals) for Bluegills and Rainbow trout were 0.06 mg/L (24 h) and 0.0093 mg/L (96 h), respectively (Langlais, Reckhow, & Brink, 1991). Excess mucus, hyperplasia, and aneurysms have been observed on the gills of fish exposed to high concentrations of ozone (Bullock, et al., 1997). However, in the presence of organic material ozone decomposes to oxygen through rapid oxidation reactions.

Ozone should be injected at concentrations which match the ozone demand of the organic material present in the system to eliminate the presence of residual ozone or a method of ozone destruction should be installed at the outlet of the ozone contact chamber

(Summerfelt S. T., Hankins, Weber, & Durant, 1997). A system should also be in place to continuously monitor the residual ozone concentration exiting the ozone contact chamber.

Ozonated water can also lead to skin and eye irritation at high concentrations of dissolved ozone. There is also potential for off-gassing of ozone gas, so ozonated water should always be used in closed piping and vessels (Gottschalk, Libra, & Saupe, 2009).

2.7 Ozone Reactor Design

An ozone contact vessel or reactor must be designed with three important criteria in mind:(i) leak-free design, (ii) the use of ozone resistant materials, and (iii) ozone transfer efficiency (Rakness, 2005). As mentioned in the previous section, ozone is a toxic gas so a leak-free design must be in place so that ozone cannot escape into the ambient air. This limits the number of potential locations for ozone implementation in a recirculating aquaculture system, as a fully enclosed vessel is required. Residence time must also be considered in the design, to ensure that sufficient time is available for the oxidation reactions to proceed which decompose ozone into oxygen. Required residence times can vary as the rate of ozone consumption is primarily dependent on the constituents in the water (reaction promoters and inhibitors). In pure water ozone has a half-life of roughly 165 minutes, but in waters with a significant amount of organic carbon and nitrite this half-life can drop to several minutes or even seconds (Summerfelt S. T., Hankins, Weber, & Durant, 1997). The most common type of ozone reactors in waste water applications are typically three types: pipelines, serpentine basins, and over-under baffled contactors (Howe, Hand, Crittenden, Trussell, & Tchobanoglous, 2012).

Due to the oxidizing nature of ozone, materials must be selected which are ozone resistant to prevent corrosion. Material selection is important to maximize the operating life of equipment and minimize ozone reactions with process pipelines which can consume ozone required for the oxidation of organic matter (Summerfelt & Hochheimer, 1997). In general, plastic polymers are the material of choice for ozone applications and metals should be avoided. However, some metals like stainless steel have very good compatibility with ozone. Refer to Cole-Parmer (2017) for a detailed table of material compatibility with ozone.

To economically and effectively dose ozone an efficient transfer system must be selected to inject gaseous ozone into liquid. Several designs exist to achieve this goal, which include fine bubble diffusers, packed columns, deep u-tube reactors, and venturi injectors (Gonçalves & Gagnon, 2011). Maintaining a high gas to liquid transfer efficiency ensures that the bulk of ozone gas is being injected as dissolved ozone in water and is not off-gassing.

In aquaculture applications, venturi injectors are a common means of ozone transfer due to their simplicity and ability to achieve high transfer efficiencies. Water flows through the injector (Figure 2-3), a pressure differential between the inlet and outlet of the injector creates a suction force which entrains the ozone gas mixture in the water. When the pressurized water enters the inlet, it is constricted in the injection chamber and changes into a high velocity jet. The increase in velocity through the injection chamber results in a decrease in absolute pressure, which creates a vacuum that enables the suction effect. Injector efficiency is dependent on the gas to liquid ratio entering the injector and the outlet pressure (Mazzei, 2017).

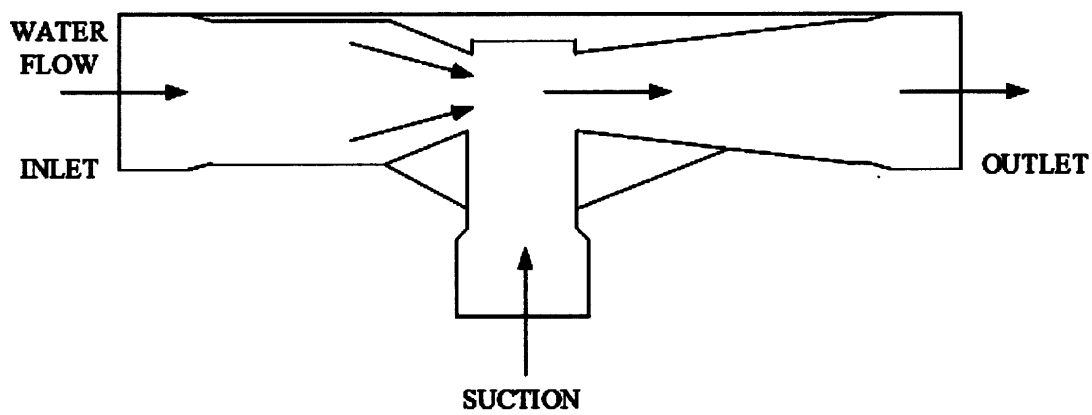

Figure 2-3: Mazzei Venturi Injector (Adapted from (Mazzei, 2017))

2.8 Oxidation-Reduction Potential (ORP)

To ensure that fish are not being exposed to residual ozone, the concentration of ozone exiting the ozone contact chamber must be monitored continuously. The issue is that it is very difficult to monitor residual ozone directly at concentrations which can be lethal to fish (can be as low as 0.01 ppm depending on fish species). Oxidation-reduction potential (ORP) probes have been used as a method to monitor residual ozone indirectly (Summerfelt & Hochheimer, 1997).

An ORP probe functions by measuring all oxidation and reduction (redox) reactions which take place at the process electrode. An oxidation reaction is the process of giving an electron, while reduction refers to a reaction that results in the gain of an electron. Typically, these probes consist of a platinum process electrode and a silver/silver chloride reference electrode. The ORP reading is measured in millivolts and is calculated using the Nernst equation (Spencer, 2016):

$$E = E^{o} - \frac{RT}{zFa} \ln \frac{a_{red}}{a_{oxi}} \quad (1)$$

Where: E is the measured potential (V);

E^o is the potential under standard conditions of concentration and temperature (V);

R is the universal gas constant (J/mol·K);

T is absolute temperature (K);

z is the number of exchanged electrons in the redox reactions;

Fa is the Faraday constant (C/mol);

a_{red} is the activity of the reducing chemical;

and a_{oxi} is the activity of the oxidizing chemical.

In an RAS setting, the organic matter acts as the main reducing agent while the dissolved oxygen is the primary oxidant (ozone also contributes). In a sense, the ORP measures the ability of the water to oxidize or break down contaminants in the system. The ORP of aquaculture water is positive (especially when ozonated). Oxidation reactions have a positive potential due to their loss of electrons and dissolved oxygen should always be plentiful (fish and nitrifying bacteria require oxygen for survival). A negative ORP value would indicate anaerobic conditions, which should never be the case in a recirculating aquaculture system. If the residual ozone concentration builds, the ORP of the water increases due to the increase in oxidant concentration.

2.9 Ultraviolet light transmittance (UVT)

Ultraviolet light transmittance (UVT) is a measure of the amount of ultraviolet light which can pass through a water sample of select path length. UVT can be directly related to UV light absorbance (UVA) through the following equation:

$$UVA = 2 - \log_{10} UVT \quad (2)$$

UVA measures the amount of ultraviolet light being absorbed in the water sample. Many compounds in water absorb UV light at certain wavelengths, which is an indication of their abundance in the water sample. In this research project, UVT readings were taken using the 254 nm wavelength which is commonly used as an indicator of the abundance of unsaturated and aromatic carbon (Ratpukdi, Siripattanakul, & Khan, 2010). This wavelength was selected because literature indicates that ozone and hydroxyl radical reaction kinetics are governed by reactions with the aromatic portion of dissolved organic matter (Elovitz, Gunten, & Kaiser, 2000). In addition, ozone treatment has been found to dramatically reduce the UV absorbance of dissolved organic matter (Wenk, et al., 2013). This reduction in UV absorbance can be used to evaluate the conversion of dissolved organic matter occurring because of ozone and the reduced aromatic content of the treated water (Gora & Chaulk, 2011).

2.10 Color

In water, color is a result of light back scattered from a body of water after it has undergone selective absorption. It can be characterized as either true or apparent color. True color is a measure of only the dissolved fraction of material present in water, while apparent color is a function of both the dissolved and suspended material. Color is measured in the blue portion of the light spectrum because water absorption is low in this region and humic substances have an equal absorbance to a standard Pt-Co reference solution around the 410 nm and 445-470 nm wavelengths. Calorimetric methods are used

to measure color, which compare the absorbance of the water sample to the Pt-Co standard at several single wavelengths (Bennett & Drikas, 1993).

Color in water can be a result of minerals, inorganic chemicals, metals, and dissolved organic matter. Normally, in recirculating aquaculture systems, color is generated by filtration of the organic compounds which result from the metabolic processes of the cultured organisms. It is often a tea colored hue in the water, which indicates a high level of organic compounds (Ritter, 2010). The color of water becomes more noticeable as water reuse is extended because of the accumulation of dissolved refractory organic compounds which resist biodegradation (Christensen, Rusch, & Malone, 2000).

Christensen et al. (2000) found that the accumulation rate of color was 12.6 CME/kg feed in a recirculating aquaculture system. The corresponding destruction rates in two trials due to ozone were 1.7 CME/g O_3 and 0.82 CME/g O_3. This results in a required ozone dosage of 7-15 g O_3/kg feed for removal of the color generated by the feed.

2.11 Ozone Treatment Guidelines

Currently in literature, guidelines for ozone use based on a mass of ozone added per mass of feed fed are specified to promote water quality improvement. One of these studies state that both water quality and fish health can be improved by adding approximately 13-24 grams of ozone for every kilogram of feed fed to the recirculating aquaculture system (Timmons, Ebeling, Wheaton, Summerfelt, & Vinci, 2001). While another, states that the typical recommended dosage is a rate of 10-15 grams of ozone per kilogram of feed fed (Gonçalves & Gagnon, 2011).

Ozone dosage guidelines are given in terms of a feed basis because most of the compounds which consume ozone in a recirculating aquaculture system are a result of fish digestion. After ingesting the feed, organic compounds are generated by the fish, which later become the bulk of the ozone consuming compounds.

The ozone dosage entering the RAS is typically controlled manually by adjusting the power on the ozone generator. The ozone dosage is either set to a value which matches the guidelines or is set through a trial and error basis. This is problematic because in both cases ozone is not being dosed optimally. Especially, in situations where the feed rate is changing on a frequent basis. In a worst-case scenario, a large drop of feedrate could occur without any change in ozone dosage, which would lead to residual ozone concentrations exiting the ozone contactors that could have a detrimental impact on the cultured fish. In all situations, ozone dosing must be closely monitored to prevent overdosing. Ideally, an automatic ozone dosing control system should be employed which is maintained on a regular basis.

2.12 Evaluation of Literature

A significant amount of research has been completed on ozone treatment, which focuses on its reaction kinetics and ability to improve water quality. However, very little work has been completed to evaluate the use of ozone treatment within operating commercial recirculating aquaculture systems. Specifically, almost no work has been completed which evaluates ozone dosage requirements based on water quality parameters instead of the amount of feed entering the system. A dosage guideline based on the feed-rate entering the system is problematic because recirculating aquaculture systems contain

solids removal equipment with different efficiencies. The efficiency and method of solids removal equipment determines the amount of organic matter reaching the ozone treatment process.

Another area of the literature which requires more work is the control of ozone dosing within RAS. As mentioned previously, ozone dosing is often controlled manually in RAS, which can lead to inefficient ozone dosages and potential ozone residuals reaching the cultured aquatic species. A common method to monitor ozone residual is an ORP probe which is placed at the outlet of the ozone contact chamber. However, in RAS this method is not ideal because an ozone residual must be present to set off the ORP alarm. Therefore, residual ozone has already left the ozone contact vessel before the ozone dosage can be reduced.

This study has been undertaken to improve and add to the ozone dosage guidelines and control strategies currently present within literature. The goal is to present an ozone dosage guideline which is dependent on the water quality of the inlet system water flow entering the ozone treatment process and a viable automatic control strategy which can be used to infer ozone demand before ozone treatment occurs.

Chapter 3 – Methodology

3.1 Buckmans Creek Hatchery Overview

The hatchery selected for the project was the Buckmans Creek hatchery in Pennfield, New Brunswick. The ozone treatment system was installed in the "A-B Line" which is used for smolt production. Figure 3-1 shows an overview of the "A-B Line" recirculating aquaculture system.

The flow diagram for "A-B Line" is slightly more complex than the previous general hatchery diagram because two sets of four culture tanks (A-line and B-line) operate in one recirculating aquaculture system. However, the general methodology remains the same, except four cylindrical concrete vessels provide a secondary water reservoir and the bottom water is treated separately from the top water during solids removal.

The A-B line was selected to take advantage of existing infrastructure which could be used in the new ozone treatment systems. Between the settle deck and head tank, four concrete vessels were being used as water reservoirs which had originally been fluidized sand biofilters. Two of these vessels were retrofitted to act as ozone contact vessels. Each vessel has a diameter of 1.83 m and a height of 4.88 m: the total volume of each vessel is 12.8 m^3. Approximately half the flow passed through the two vessels which were used as ozone contactors and provided a residence time of approximately 10 minutes. These vessels are located after all other water treatment processes, so the water entering the contactors should exhibit the lowest ozone demand available in the system.

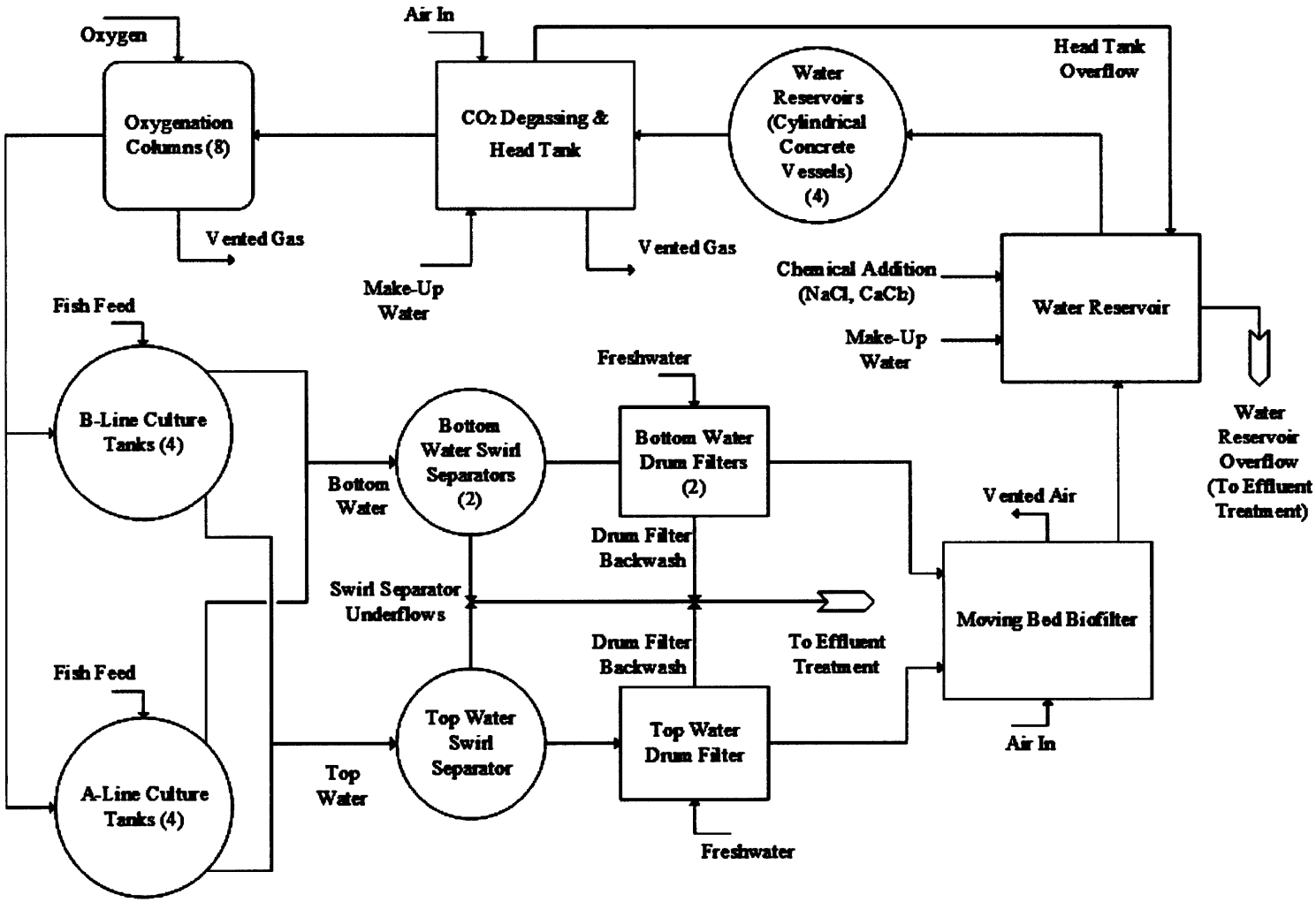

Figure 3-1: Buckmans Creek Hatchery - A-B Line Overview

3.2 Buckmans Creek Hatchery – Ozone Treatment Overview

In the Buckmans Creek hatchery, ozone gas was injected into a portion of the full recirculation flow using a Mazzei venturi injector. Ozone was generated using an Ozonia (OZAT, model: CFS-3 2G) ozone generator which used oxygen feed gas and could produce 225 g O_3/hr. Ozone injection took place in an ozone side-loop (see Figure 3-2). The benefit of this method is that all ozone enters the hatchery as dissolved ozone in water instead of in a gaseous form. This limits potential contact points with ozone gas; it is only present within the Tygon tubing lines located in the ozone generator room.

An injection nozzle combined the ozonated water from the side-loop with a portion of the remaining system water upstream of the concrete vessels in the inlet pipe to increase residence time and maximize mixing. The combined flow is then split and sent to two concrete cylinder ozone contact chambers. After passing through the contact chambers, the treated water is sent to the head tank to combine with the remaining flow being pumped from the settle deck. Before reaching the head tank, a small side stream of treated water is diverted back to the ozonation loop.

An ORP probe was placed at the outlet of the ozone contact chambers as an additional safety mechanism to ensure no residual ozone was exiting these vessels. A safe ORP value for aquaculture water is 300 mV (Bullock, et al., 1997) . This ORP value was used as the alarm set point in both hatcheries for ozone residual monitoring. Monitoring ORP continuously ensured that no residual ozone reached the fish culture tanks during ozone treatment.

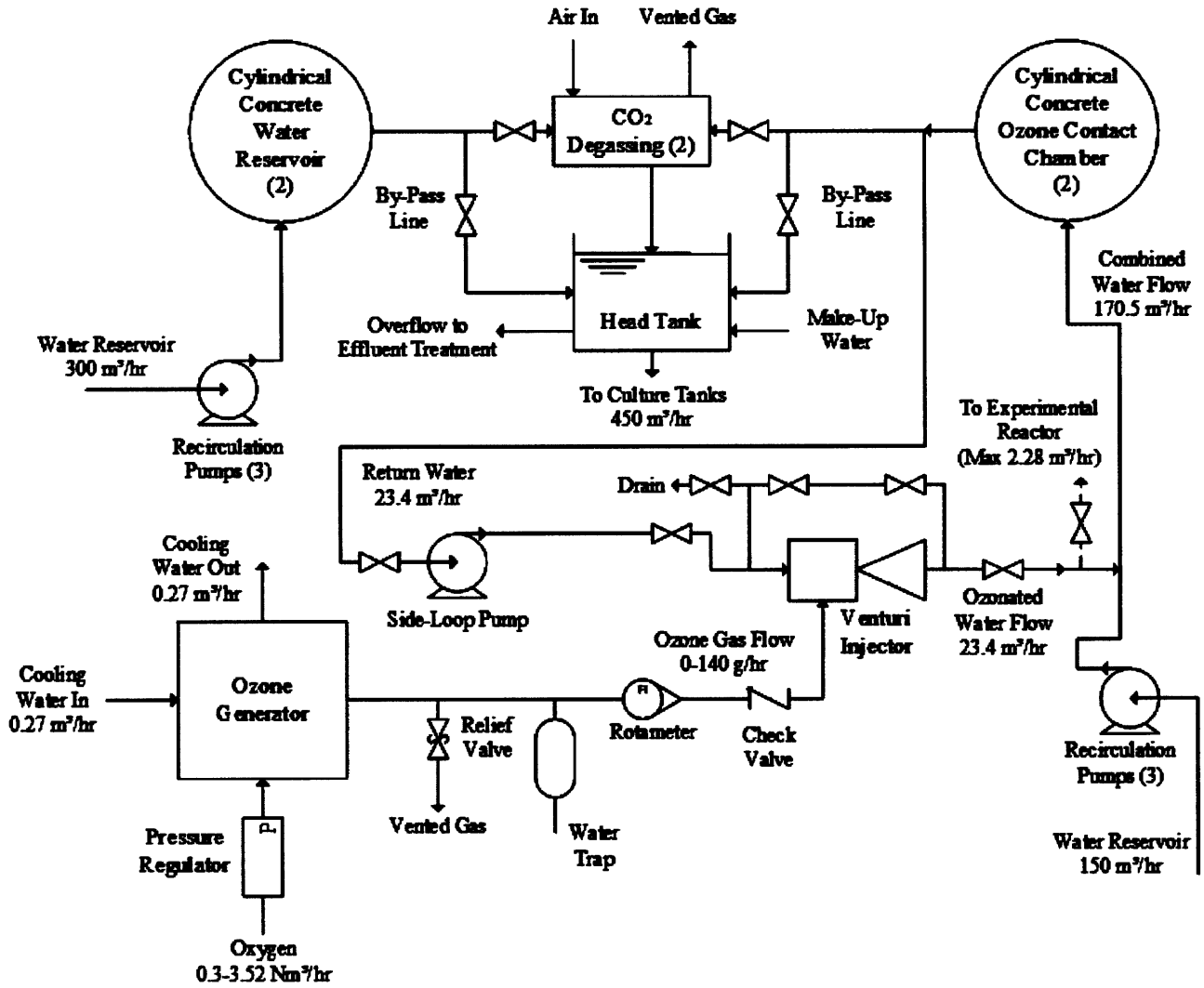

Figure 3-2: Buckmans Creek Hatchery - Ozone Treatment Side-Loop

3.3 Water Quality Parameters

To evaluate system performance, the quality of the water exiting and entering the water reservoir, concrete vessels, and experimental reactor was monitored. The water quality parameters which were measured are the following: water temperature, biochemical oxygen demand (BOD), chemical oxygen demand (COD), nitrite, ammonia, color, pH, dissolved oxygen, hardness, ultra-violet light transmittance, color, and dissolved organic carbon (DOC). These parameters were chosen based on their direct influence on the ozonation reactions and the desired products of these reactions. Ozone reactions are directly influenced by pH, alkalinity, and natural organic matter (Laplanche, Orta de Velasquez, Boisdon, Martin, & Martin, 1995). Water temperature also influences the ozone decay kinetics (Summerfelt, Bebak-Williams, Fletcher, Carta, & Creaser, 2008). The other parameters (BOD, COD, DOC, nitrite, and ammonia) were measured as they are a direct indication of the ozone demand. These are the components which are oxidized by ozone. Variation in nitrite concentration is an indicator of nitrite oxidation to nitrate (Summerfelt S. T., Hankins, Weber, & Durant, 1997). Ultraviolet light transmittance can be used as an indication of the amount of double bond organic compounds present in the water (Roustan, Debellefontaine, Do-Quangq, & Duguet, 1998). The water quality values of the RAS operating with ozone were compared to values gathered before ozone treatment began.

Several standard methods were used to measure the desired water quality parameters. Fortunately, these trials took place within a recirculating aquaculture system, this meant that water temperature, pH, and hardness measurements were available as they were being monitored to ensure proper water conditions were met for the farmed fish. Nitrite, ammonia, dissolved organic carbon, and chemical oxygen demand were monitored

using Hach test kits of the appropriate range (Hach, 2015). Dissolved oxygen (DO) levels were measured using a dissolved oxygen probe. BOD (dilution method 5210B) was measured using standard methods outlined within the standard methods for the examination of water and wastewater (American Public Health Association, American Water Works Association, Water Environment Federation, 2015). The ultra-violet light transmittance was measured using both a portable Real-Tech portable UVT monitor and a Sensorex UVT-LED probe. Color was measured using a Lamotte Smart Spectro 2 spectrophotometer using the platinum cobalt method.

Residual ozone concentration exiting the ozone contact vessels was monitored using an Aquamatrix P60c oxidation-reduction potential (ORP) probe. This probe is used as a safety mechanism to ensure no residual ozone concentration is exiting the contact vessels. Ozone test kits (Ozone Solutions, K-7404) were also used to determine ozone concentrations in the experimental reactor tests and to measure the amount of residual ozone exiting the contact vessels. ORP probe measurements were also taken at the inlet of the ozone contact vessels as a comparison point.

3.4 Description of the Experimental Ozone Reactor

An experimental ozone reactor was installed in the A-B Line at the Buckmans Creek hatchery to provide a vessel for experiments used to determine the ozone reaction kinetics in the recirculating aquaculture system. The experimental reactor acted as a side loop; system water was pumped from the water reservoir ("settle deck") to the reactor and ozonated water was extracted from the full-scale ozonated water line. At the inlet of the

reactor, the system water and ozonated water were mixed. Refer to Figure 3-3, for a layout of the experimental reactor system.

A 1-inch pump was used to provide system water flow, it pumped a maximum of approximately 100 liters/minute. The ozonated water was extracted from the main ozonated water line via gravity flow and the ozonated water flow meter could measure a maximum of 38 liters/minute. Bucket tests were used to determine the total combined water flow exiting the experimental reactor.

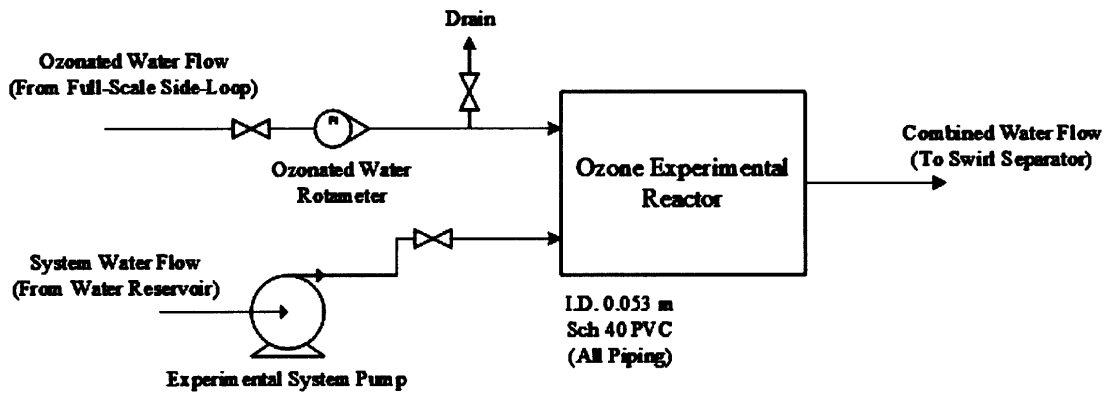

Figure 3-3: Experimental Reactor Flow Diagram

Figure 3-4, is a schematic of the experimental reactor. The experimental reactor was mounted on a wall in the hatchery and consisted of several rows of 2-inch PVC pipe. At select locations, sampling ports were inserted (pipe tee locations). In total, the length of the reactor was approximately 47 meters and it contained 6 sampling ports (numbered on the schematic). As shown in the schematic, the sampling ports were not evenly spaced within the experimental reactor. Many of the ports were located at the very beginning of the reactor because the dissolved ozone was expected to be consumed rapidly by the instantaneous ozone demand of the system water. In addition, there was an extra 5 meters

of length at the outlet due to the 1-inch flexible tubing that brought the outlet water to the swirl separator.

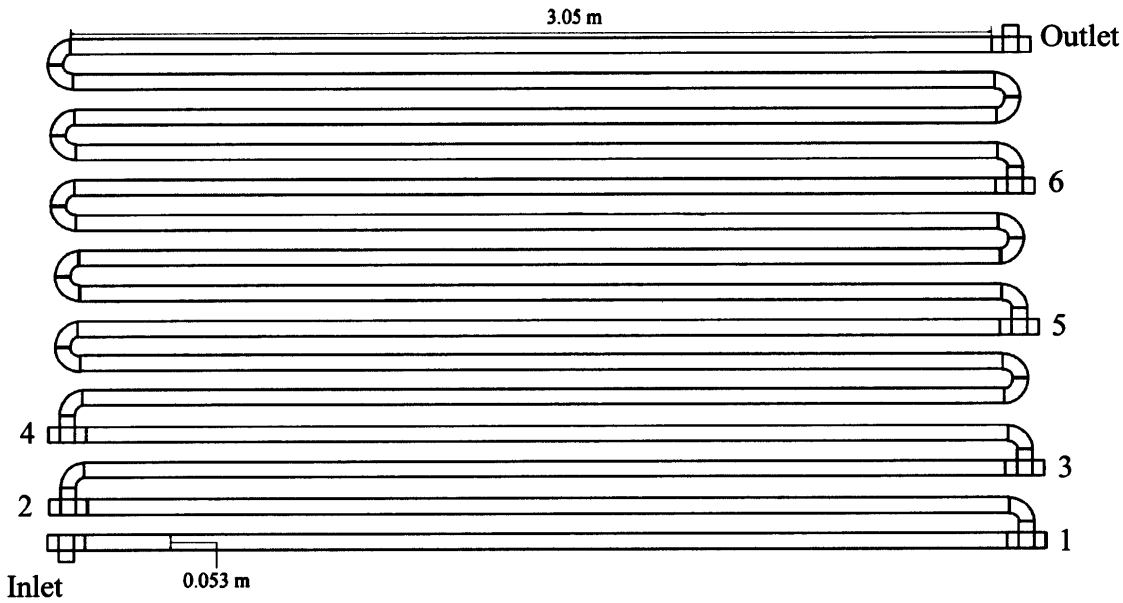

Figure 3-4: Experimental Reactor Schematic

Ultraviolet light transmittance and ozone concentration were measured at each sampling port using the techniques mentioned in section 3.3. The initial ozone concentration entering the experimental reactor was calculated based on the following equation:

$$(Q_{ozonatedflow} \cdot C_{O_3entrance})/Q_{combinedflow} = C_{O_3initial} \quad (3)$$

Where: $Q_{ozonatedflow}$ is the ozonated water flow entering the reactor (L/s);

$C_{O_3entrance}$ is the concentration of ozone in the ozonated flow entering the reactor (g/L);

$Q_{combinedflow}$ is the total combined flow (L/s);

and $C_{O_3 initial}$ is the initial concentration of ozone in the experimental reactor (g/L).

Due to the set-up of the experimental reactor, the ozone concentration entering the reactor could only be measured in the ozonated water before it was mixed with the system water at the reactor inlet. This concentration, then had to be adjusted using the equation shown above to account for the system water dilution of the initial ozone concentration in the total combined flow.

Without the experimental reactor, residence time trials would not have been possible. In the full-scale system, there was no method to extract samples quickly at different residence times. In addition, the experimental reactor provided a single pass system that could be altered to easily test different conditions. For example, large ozone doses could be tested without fear of ozone residual reaching the culture tanks because the dosage would be very small in comparison to the full-scale system water flow. Also, the system water flow could be varied significantly without interfering with the full-scale system. The main benefit of the experimental reactor was the elimination of many constraints that were a result of working with a commercial aquaculture facility.

Chapter 4 – Results and Discussion

4.1 Ultraviolet Light Transmittance Correlations

As mentioned previously in the literature review chapter, UV light transmittance (UVT) and UV light absorbance (UVA) can be used as indicators of the aromatic and the unsaturated carbon content of the natural organic matter in water. Therefore, these parameters can also be used to infer the total concentration of organic matter by relating the UVT to other water quality parameters. For example, if a grab sample of water is diluted to varying concentrations of dissolved organic carbon and the UVT is measured at each of these dilutions; a curve can be generated which relates the concentration of dissolved organic carbon to the measured UVT value. The underlying principle is that the aromatic and the unsaturated carbon composition of the total dissolved organic carbon should not change throughout the measurement, so any change in UVT is directly related to the total amount of dissolved organic carbon. In all of the UVT correlations, the horizontal error bars associated with the water quality parameters are due to each trial being completed in triplicate to ensure experimental accuracy.

4.1.1 UVT and Biochemical Oxygen Demand Correlations

Biochemical oxygen demand (BOD) is a measure of the amount of oxygen required in water for microorganisms to decompose the organic matter in the water. Following the same principle outlined above, a correlation can be generated which relates the total BOD to UVT. Figure 4-1, shows a correlation generated between unfiltered BOD and UVT for the Oak Bay hatchery water. The Oak Bay hatchery is another recirculating aquaculture system; water samples were taken from this hatchery for analysis in addition to the

Buckmans Creek hatchery. To establish correlations over a range of values, water taken from the recirculating aquaculture system was combined with distilled water. An increasing percentage of distilled water simulated water, which was deemed "cleaner" (contained less light-absorbing organic substances).

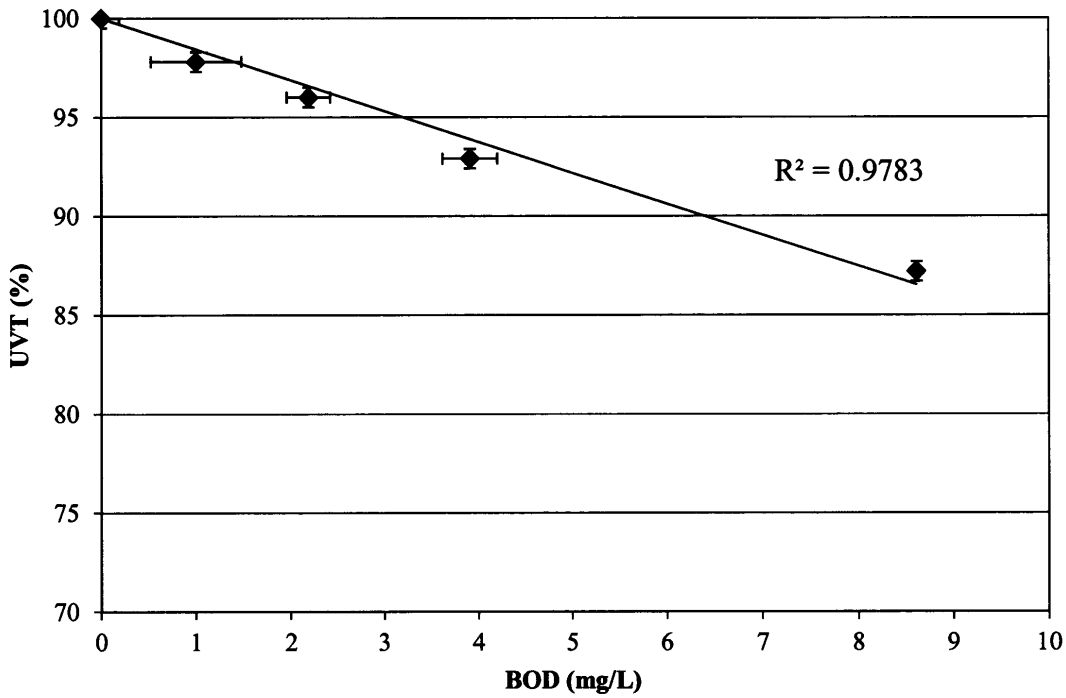

Figure 4-1: UVT vs. BOD Correlation - Unfiltered Sample (Oak Bay Hatchery)

A lower UVT indicates the presence of more UV light absorbing organic compounds. Therefore, a higher BOD value is measured as UVT decreases, which creates an inverse relationship between the parameters. A strong correlation was developed between both parameters and it is possible to infer a value of BOD based on a UVT measurement of the water. However, this correlation is not unique, it is dependent on the percentage of organic matter (indirectly measured via BOD) which can absorb UV light. If

this correlation is repeated for a different water source it will change depending on the source of the BOD.

Figure 4-2 illustrates an example of the BOD composition dependence of the UVT correlation. This is a second correlation which was generated from the Oak Bay hatchery water. However, these measurements were taken after the water was filtered through a 1.6 μm filter which eliminated the particulate matter contained in the water. In comparison to the previous correlation, a substantial amount of the BOD was removed through filtration. However, the UVT measurements remained almost identical to the previous experiment, but had reduced BOD counterparts. Consequently, the correlation changed due to the change in concentration of particulate matter in the water sample.

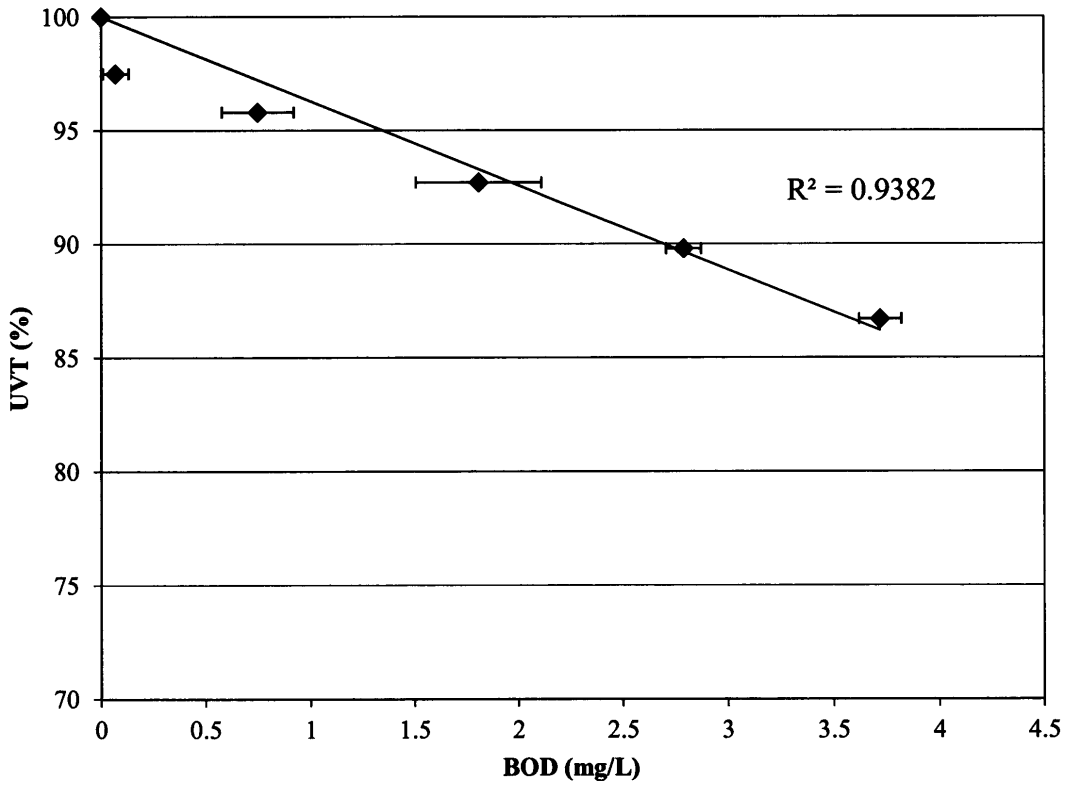

Figure 4-2: UVT vs. BOD Correlation - 1.6 μm Filter (Oak Bay Hatchery)

Interestingly, this comparison also illustrates another important result of these correlations. The elimination of particulate matter through filtration resulted in a minimal UVT measurement change which indicates that the dissolved organic matter plays a much greater role in UV light absorbance. Consequently, UVT measurements taken in a recirculating aquaculture system are an indication of the water quality change in terms of dissolved organic matter, but do not account for changes in the total suspended solids.

4.1.2 UVT and Chemical Oxygen Demand Correlations

Correlations were established for UVT and COD as the biodegradable portion of the organic matter is not solely responsible for ozone consumption and UV light absorbance. The chemical oxygen demand is a measure of all organic matter which can be oxidized in the water and is a better representation of the total potential ozone consumption of the water. Figure 4-3 illustrates the correlation between UVT and COD. In recirculating aquaculture systems, the COD is much greater than the BOD because it encompasses both the biodegradable and non-biodegradable portion of the organic matter. As dissolved organic matter is circulated through the system, the biodegradable portion is removed. However, the non-biodegradable portion accumulates which leads to a significantly higher COD value in comparison to the BOD value. As mentioned previously, the BOD correlation is not unique: this also applies for the COD correlation. It is dependent on the fraction of measured COD which is UV light absorbing.

The COD parameter also shows a strong correlation with UVT. The trial shown above was completed using unfiltered water from the Buckmans Creek hatchery. Unfortunately, a second correlation using a filtered sample could not be developed because

the resulting COD concentrations were too low to be accurately measured by the available testing methods. However, it is expected that the findings from the BOD trials apply in this experiment because COD also encompasses both the particulate and dissolved organic carbon fractions of the sample.

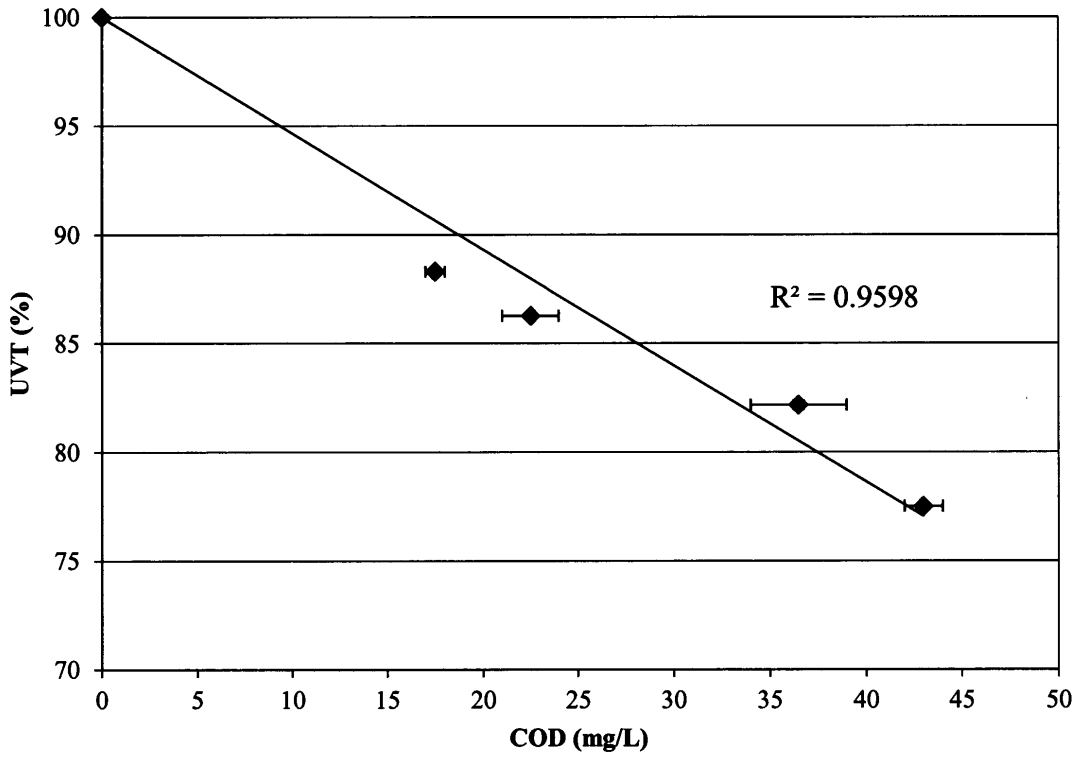

Figure 4-3: UVT vs. COD Correlation - Unfiltered (Buckmans Creek Hatchery)

4.1.3 UVT and Dissolved Organic Carbon Correlations

Dissolved organic carbon has been shown to be one of the most important indicators of ozone demand in water. In addition, the kinetic decay constant of ozone has been found to be strongly related to UVT and dissolved organic carbon (DOC) (Roustan, Debellefontaine, Do-Quangq, & Duguet, 1998). To determine whether UVT can be used

as a surrogate parameter for DOC, a correlation was generated between the two parameters. In Figure 4-4, correlations are shown which were generated using water from the Oak Bay and Buckmans Creek hatcheries.

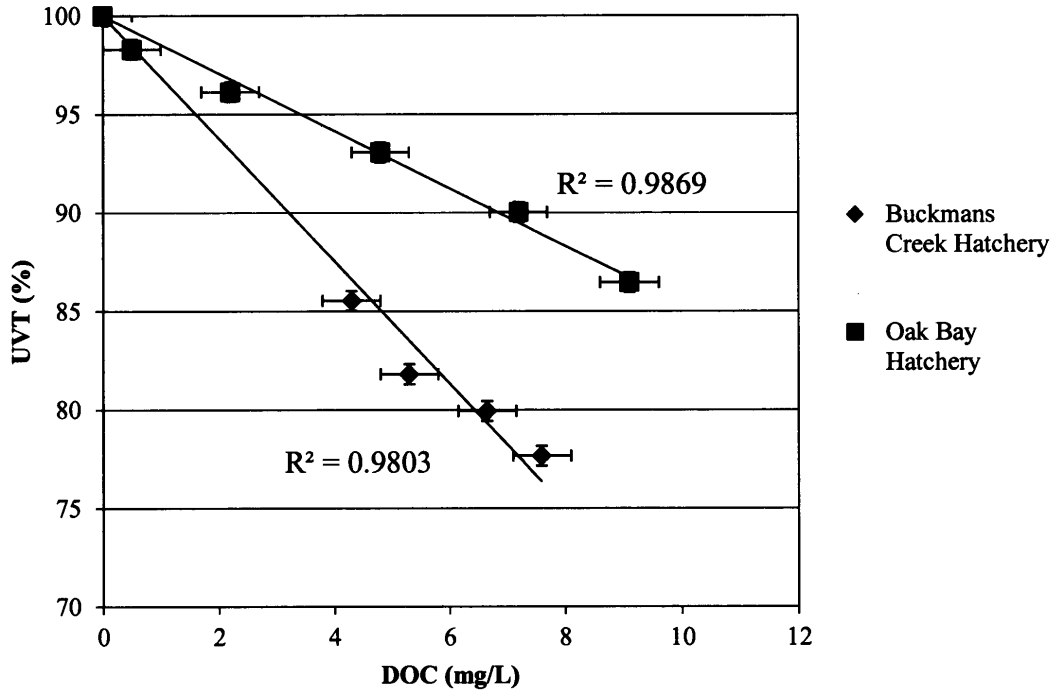

Figure 4-4: UVT vs. DOC Correlation - 0.45 μm Filter

To measure dissolved organic carbon both samples were filtered using a 0.45 μm filter. It is clear from the graph that water from the two hatcheries demonstrate a different UVT versus DOC correlation. This aligns with the findings from the BOD trials, which indicated that different water samples do not produce a unique correlation between UVT and organic matter content. In this case, the correlations are different because the fractions of organic carbon which absorb UV light must be different in the two samples.

If the amount of dissolved organic carbon varies in different hatcheries; the ozone demand will also vary because of ozone's reactivity with different compounds. In the graph

shown in Figure 4-4, the undiluted Oak Bay hatchery water sample contains a higher concentration of dissolved organic carbon but the percentage of UV absorbing components is lower in comparison to the Buckmans Creek hatchery water. The Buckmans Creek hatchery water has a lower UVT at a lower dissolved organic carbon concentration which means that a higher percentage of these compounds must be UV absorbing. Essentially, the DOC measurement is the quantity of compounds in the water source which may react with ozone and the UVT measurement is an indication of their potential reactivity due to the high UV absorbance of double bond compounds, which react rapidly with dissolved ozone.

4.1.4 Control based on UVT

Originally, the UVT correlations presented in this chapter were developed in hopes of creating a method of ozone treatment control which relied on the prediction of incoming ozone consuming compound concentrations based on UVT measurements. Ideally, this control system would monitor the ozone consumption in the ozone treatment side-loop to calculate the ozone demand of the full-scale system. Unfortunately, it became apparent that this method of control had several faults which would lead to difficult implementation.

Firstly, each water source had unique correlations with UVT. This presents a problem because in each individual water source, a new correlation would have to be developed to implement a control system. Even in a single system, as continuous ozone treatment operated over time, the composition of the water would change because of the oxidation reactions which breakdown the organic matter into smaller components. In addition, the composition of water could change in the system (different feed, new well,

etc.), which would require a new correlation and could result in improper control if left unchecked.

Secondly, ozone strongly absorbs UV light in the 254 nm wavelength which could cause interference with the control system. Therefore, this method would not be viable in the ozone side-loop because of the presence of dissolved ozone. Measurements taken in the presence of dissolved ozone would indicate a falsely low UVT because of the added absorbance of ozone, which could cause overdosing of ozone within the system.

Finally, instead of attempting to infer an ozone demand based on UVT measurements, it was decided it would be much simpler and more cost effective to measure the ozone consumption directly in the ozone side-loop. A direct measurement of ozone consumption required only a single sensor and the ozone generator input. In addition, the complexity of attempting to continuously ensure the UVT correlations for the system water remained accurate was eliminated. The ozone treatment side-loop provided a unique opportunity to measure the ozone demand in a small sample of water before the dissolved ozone reached the full-scale system.

Although, the UVT measurements were not chosen as the ideal control parameter, their ability to characterize the recirculation water should not be discounted. In single pass situations, UVT measurements are an excellent method of measuring the change in organic matter composition due to ozone reactions. UVT measurements are an effective method of determining overall water quality, but further research must be completed before UVT is considered a viable control parameter.

4.2 Experimental Reactor – Ozone Reaction Kinetics

Ozone consumption kinetics are essential in determining the proper ozone dosage in recirculating aquaculture systems. One of the primary factors which limits the ozone dose, is the need to eliminate any residual ozone which could encounter the cultured fish. For this reason, it is very important to have a good understanding of the reaction time of ozone within the system after it is injected into the water. To evaluate the ozone reaction kinetics, an experimental reactor was built so that the ozone concentration in the reactor could be monitored over time and trials could be completed using high ozone dosages without any fear of residual ozone reaching the fish. The trials completed in the experimental reactor used a combination of both ozonated water and system water to evaluate the reaction rates of ozone.

To clarify, the ozonated water being used in the experimental trials was withdrawn from the main ozonated water line which fed the reactor treating the full-scale system water. This has an important implication which must be considered when evaluating the consumption kinetics. The water sent through the ozone treatment loop is taken just after the ozone contact chamber. Initially, as the water passes through the Mazzei injector, ozone is injected into the water at a high concentration and can react with the organic matter present in the water for approximately 19 seconds, before reaching the experimental reactor. Thus, the ozone concentration in the ozonated water entering the experimental reactor is the resultant residual ozone leftover from the initial dosage. Therefore, the ozonated water undergoes ozone treatment before entering the experimental reactor and is not simply water taken directly from the RAS. This means that only the system water which

is mixed with the ozonated water contains organic matter which has not previously been exposed to dissolved ozone.

Figure 4-5 illustrates two different experimental reactor trials, one trial which was completed using 100% ozonated water and another which used 58% ozonated water and 42% system water. The error bars on the graph are to account for the accuracy of the tests used to measure both ozone concentration and UV-light transmittance. In the 100% ozonated water trial, the ozone concentration descends slowly over time and appears to follow an exponential pattern characteristic of a first order reaction. However, in the trial containing a mix of ozonated water and system water, there is a rapid drop in ozone concentration.

In the corresponding UVT data (shown with open symbols on a secondary y-axis), the 100% ozonated water trial has an almost constant UVT value and increases by roughly 1% after passing through the reactor. In the mixed flow trial, UVT increases rapidly from 81.1% to 82.3% during the time between the reactor inlet and first sampling port when the instantaneous ozone demand is occurring. After the first sampling port, the rate of UVT increase in the mixed flow trial diminishes and increases at a rate which corresponds to the 100% ozonated water trial. This indicates that the rate of UVT change is directly related to the rate of ozone consumption, which is likely due to the ozone reactions that change the structure and reduce the UV absorbance of the dissolved organic compounds in the water sample.

Upon examination of the mixed flow trial, it appears that the ozone concentration remains constant for an extended period after approximately the 23 second mark on the x-axis. This is due to the test kits which were used to detect ozone concentration, which had

a minimum ozone detection limit of 0.05 mg/L. However, if any ozone was still present after the initial instantaneous ozone demand, it is expected that it would decompose under very similar kinetics to the ozonated water only trial.

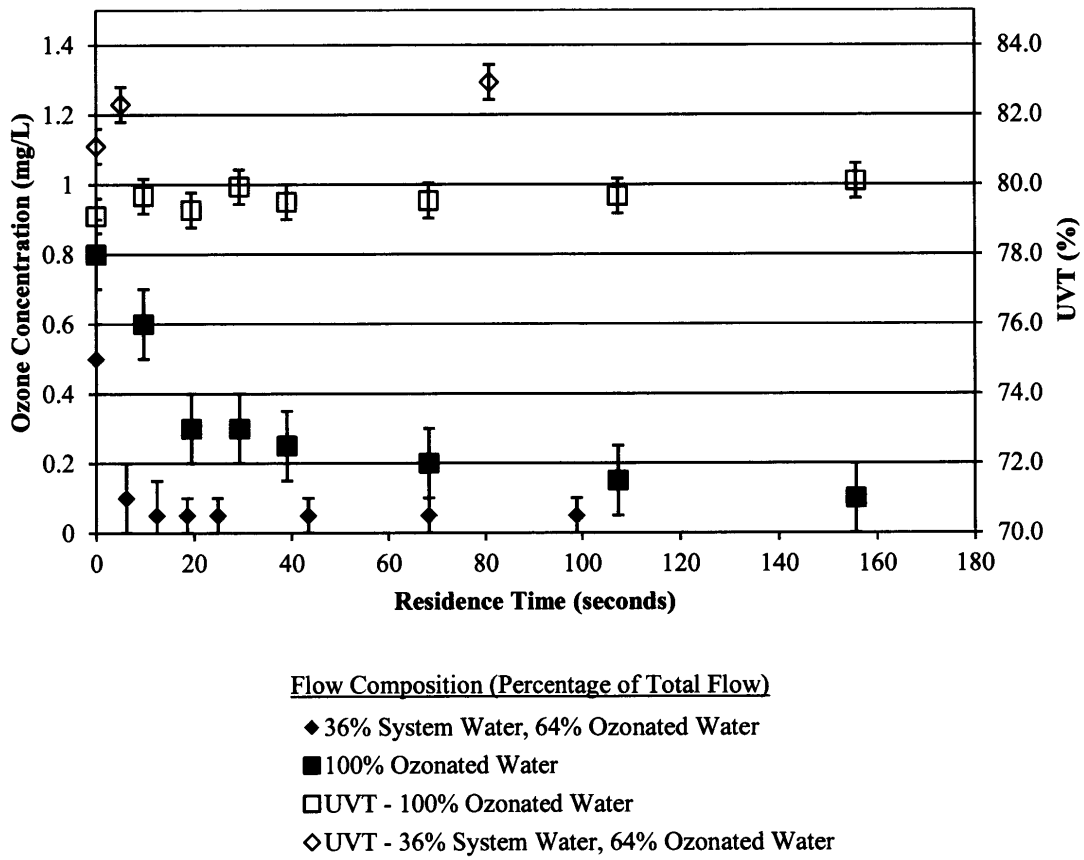

Figure 4-5: Experimental Reactor - Trial Comparison

4.2.1 Ozone Side-Loop Injection

As expected from previous trials, instantaneous ozone demand played a key role in ozone decay. The ozone concentration dropped to trace amounts in a matter of seconds, which indicates that very little residence time is required in the full-scale system when the ozone dose does not exceed the instantaneous demand. Initially, ozone was dosed in the

ozonated water side loop stream at a concentration of 5.9 mg O_3/L. In the 22 seconds of residence time between the ozone injector and experimental reactor, the ozone concentration was reduced to a residual of 1.75 mg O_3/L. After accounting for the system water dilution, the total ozone dosage in the experimental reactor and full-scale reactor was 0.23 mg O_3/L (same flow ratio entering both the full-scale and experimental reactor systems). The ozone side stream water therefore consumed roughly 3.7 mg O_3/L before it could reach the ozone contact chamber and full-scale system flow, which indicates that the system could handle much higher ozone dosages without any residual escaping the ozone contactor. However, the ozone dosage was limited by the ozone generator and gas injection system which could output a maximum of 140 g O_3/hour (dosage used in this trial).

Slow ozone decay was not observed in the mixed flow trials because the instantaneous ozone demand consumed the entire ozone dosage before the first sampling port of the experimental reactor. However, a much larger ozone dosage was injected into the ozone side-loop and the slow decay could be evaluated in the experimental reactor by adding no system water. A total organic carbon (TOC) sample was taken from the system and ozonated water; the average TOC in each sample was 13.5 mg/L and 10.5 mg/L, respectively. This result indicates that some organic carbon was consumed during ozonation, however, a substantial portion of the organic carbon is still present within the water and this residual carbon is not reacting through the instantaneous ozone demand pathway. Instead, the remaining organic carbon is likely contributing to the indirect pathway of ozone decay as either an inhibitor or a promoter to the reaction. This is an indication that only certain organic compounds can contribute to the instantaneous ozone

demand. Also, when new system water is introduced to the experimental reactor the instantaneous ozone demand returns.

4.2.2 Instantaneous Ozone Demand

The rapid drop in ozone concentration observed in the trial with a mix of ozonated and system water is the instantaneous ozone demand (IOD). The instantaneous ozone demand has been well documented in previous literature (Elovitz & Gunten, 1999; Roustan, Debellefontaine, Do-Quangq, & Duguet, 1998; Cho, 2003). Initially, a high concentration of ozone consuming compounds is present in the water, which react quickly with ozone through the direct reaction pathway. This direct reaction produces by-products which are less reactive with ozone and as direct oxidation proceeds the kinetic regime transitions from a fast to slow reaction (Gottschalk, Libra, & Saupe, 2009). Eventually, the indirect pathway begins to dominate oxidation, but is limited by the scavengers which reduce the rate of ozone decay.

The instantaneous drop in ozone concentration has practical implications: it removes a significant percentage of the initial ozone concentration. This drastically reduces the amount of residence time required to reduce ozone concentrations to trace residual amounts. To determine the length of time required to achieve a safe level of ozone decay for fish health, several trials were completed using flow ratios in the experimental reactor which aligned with the ozone dosages occurring in the full-scale system. These trials are a representation of the reaction between the ozone residual and full-scale system water. Figure 4-6 illustrates a full-scale system flow ratio trial completed in the experimental

reactor. The change in error bar size is due to the range of the residual ozone test which varied at different ozone concentrations.

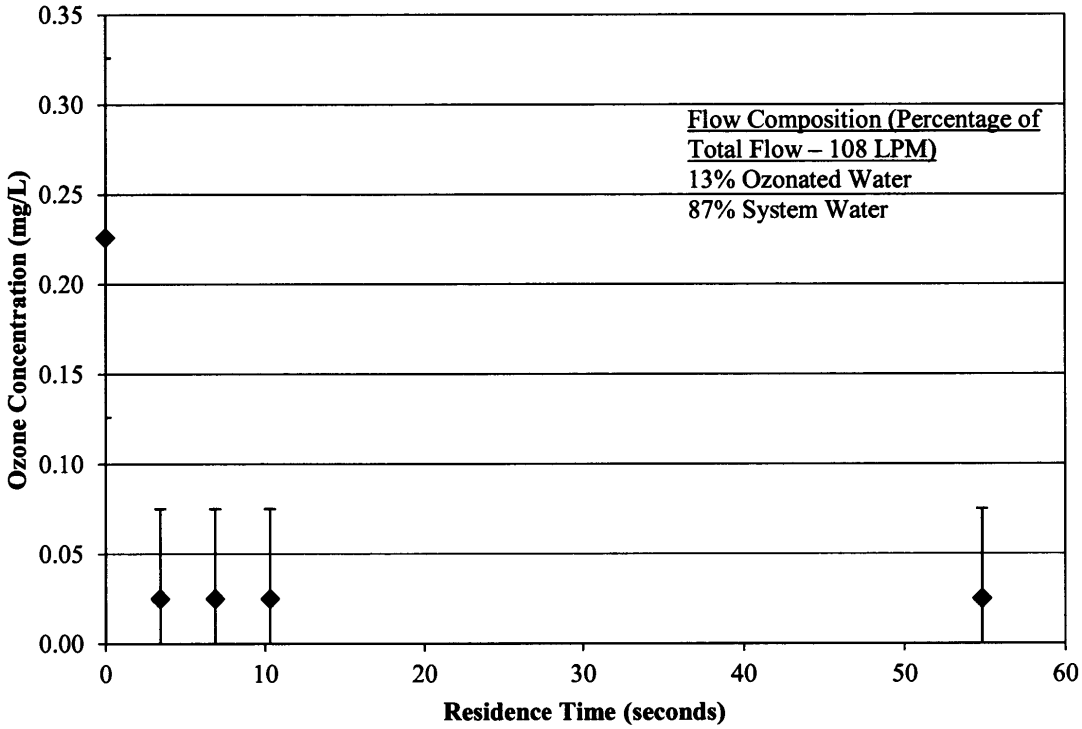

Figure 4-6: Experimental Reactor - Full-Scale Flow Composition

After completing mixed flow trials in the experimental reactor, which often had the instantaneous ozone demand (IOD) diminishing ozone levels to the minimal detection limit of the ozone test kit, the curve in Figure 4-7 was generated.

Figure 4-7, is a graph of the initial ozone concentration versus the instantaneous ozone demand measured experimentally in each trial. This graph confirms the suspicion that the instantaneous ozone demand was in fact causing the consumption of the entire ozone dosage being injected in the experimental reactor. The ozone test kits were simply measuring the minimal detection limit at each sampling port. In each trial, regardless of the

flow rate of system water entering the reactor, the instantaneous ozone demand increased with a higher initial concentration of ozone. The underlying reason for this correlation is that the ozone demand of the system water was never fully reached in any of the experimental reactor trials. Therefore, with the dissolved natural organic matter components always in excess; the instantaneous ozone demand increased, as more ozone was added to the system. In all mixed flow experimental trials, the instantaneous ozone demand consumed the entire ozone dosage which aligns with previous ozone consumption kinetics observed for wastewater.

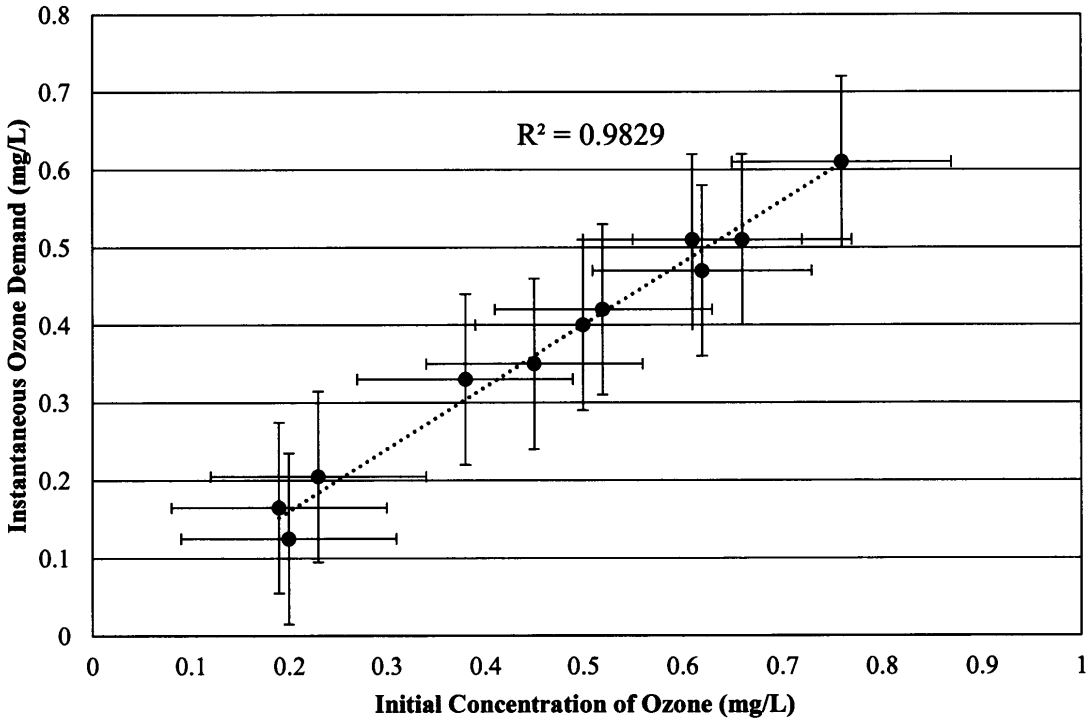

Figure 4-7: Experimental Reactor - Instantaneous Ozone Demand

Figure 4-8 illustrates the expected behavior of the instantaneous ozone demand as the initial concentration of ozone increases. When ozone is the limiting reactant, the

instantaneous ozone demand continues to increase as ozone dosage increases because organic matter is always present in excess to react with the dissolved ozone. Once the initial ozone concentration reaches a point where it becomes the excess reactant, the actual total instantaneous ozone demand is reached. At this point, all available organic matter which readily reacts with ozone is being oxidized and it becomes the limiting reactant. As previously mentioned, the trials completed in the experimental reactor are expected to fall on the first portion of the graph (ozone is the limiting reactant). Therefore, instantaneous ozone demand increases with the initial ozone concentration.

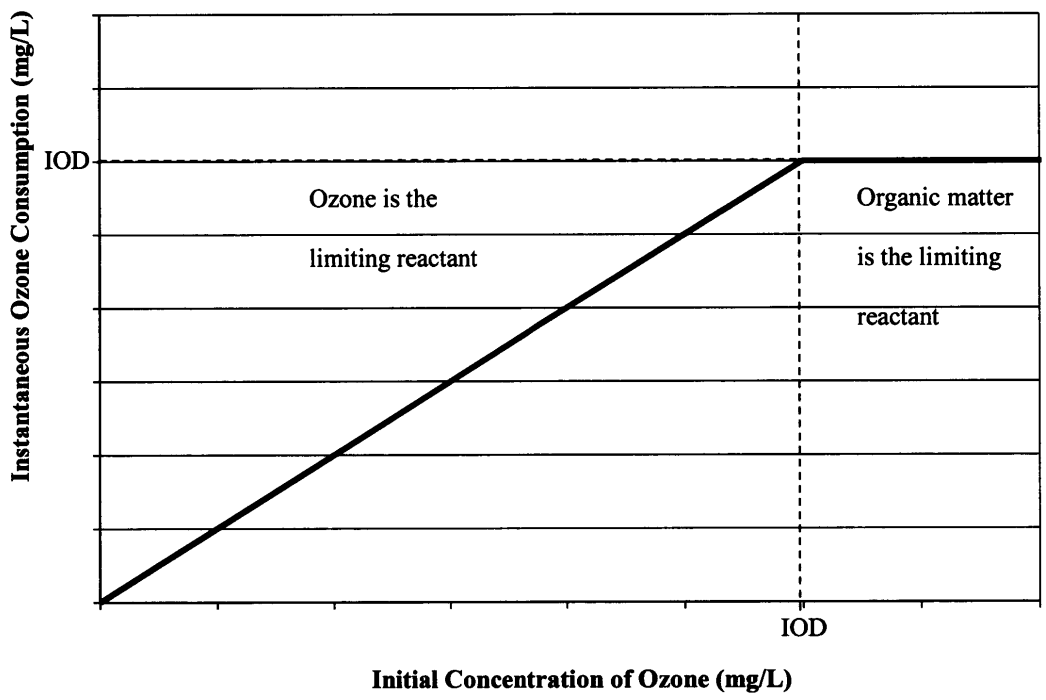

Figure 4-8: Predicted Behavior for Instantaneous Ozone Demand

To confirm that the total instantaneous ozone demand was not being reached in the experimental reactor trials, an analysis was completed on the ozone side-loop pipeline between ozone injection and the experimental reactor entrance sampling port. In the ozone

side-loop, the ozone dosage was large enough to create an ozone residual which was sent to the experimental reactor and the full-scale ozone contact chamber. Therefore, the ozone side-loop was operating under conditions with excess ozone and the total instantaneous ozone demand of the untreated water flow could be calculated based on the ozone consumption occurring in the pipeline between these two points. After accounting for minor ozone consumption due to the slow ozone decay occurring in the pipeline, the average instantaneous ozone demand was calculated to be 3.12 ± 0.30 mg/L. This value then had to be adjusted to account for the ozonated and untreated water mixture in the experimental reactor. Once adjusted to account for water composition, the calculated instantaneous ozone demand was 1.12 ± 0.09 mg/L for the experimental reactor. This value exceeds the initial concentration of ozone entering the experimental reactor in all trials and confirms that the system was operating with ozone as a limiting reactant. Refer to appendix A, for detailed raw data of each experimental reactor trial.

4.2.3 Slow Ozone Decay

The slow decay observed in the 100% ozonated water trials is most likely due to the reaction of hydroxyl radicals with organic compounds which do not readily react with ozone and the presence of OH-radical scavengers. As mentioned previously, the direct reaction pathway of ozone is selective while the indirect pathway is unselective. In this case, hydroxyl radicals are reacting with the residual organic components which are still left in the water after treatment and the indirect reaction pathway becomes dominant. However, the indirect pathway is being limited by the bicarbonate scavengers present in the system (sodium bicarbonate is often used to replace lost buffering capacity in RAS).

The scavengers produce reaction products which do not react to form additional radicals. This slows down the radical chain-reaction and extends the life of ozone in the system.

4.2.4 Experimental Reactor Results

Figures 4-9 and 4-10 illustrate the change in color and UVT for the experimental trial completed using the same flow composition as the full-scale system. In the latter measurements in the experimental reactor, the ozone concentrations reached the minimal detection limit. Therefore, the error bars for ozone concentration surpass the zero point on the graph which indicates that very little or no ozone remains after the initial ozone consumption occurs. Even with a limited ozone dosage, during the single pass through the reactor UVT increased by 0.9% and color decreased by roughly 14 CU were measured on average across the reactor.

The results obtained with the experimental reactor suggest a possible strategy for injecting ozone in the full-scale system without the generation of residual ozone. Ideally, the ozone dosage entering the full-scale reactor should be increased until it matches the instantaneous ozone demand being exerted by the ozone side-loop inlet water. The ozone side-loop inlet water would be extracted from the water reservoir instead of after the ozone contactor, so that the ozone demand of the water entering the side-loop and full-scale contact chamber would be identical. Therefore, the consumption of ozone in both streams would be the same and the ozone consumed by the side-loop system water could be treated as the maximum allowable dosage to the full-scale system ozone contactor which would result in no residual ozone leaving the system.

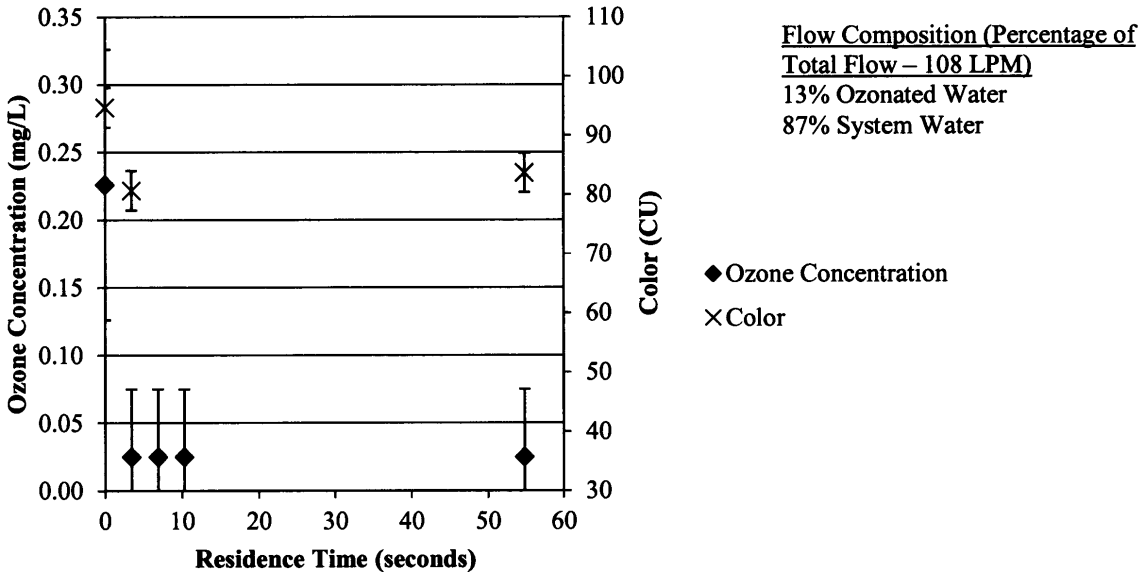

Figure 4-9: Experimental Reactor - Color Removal

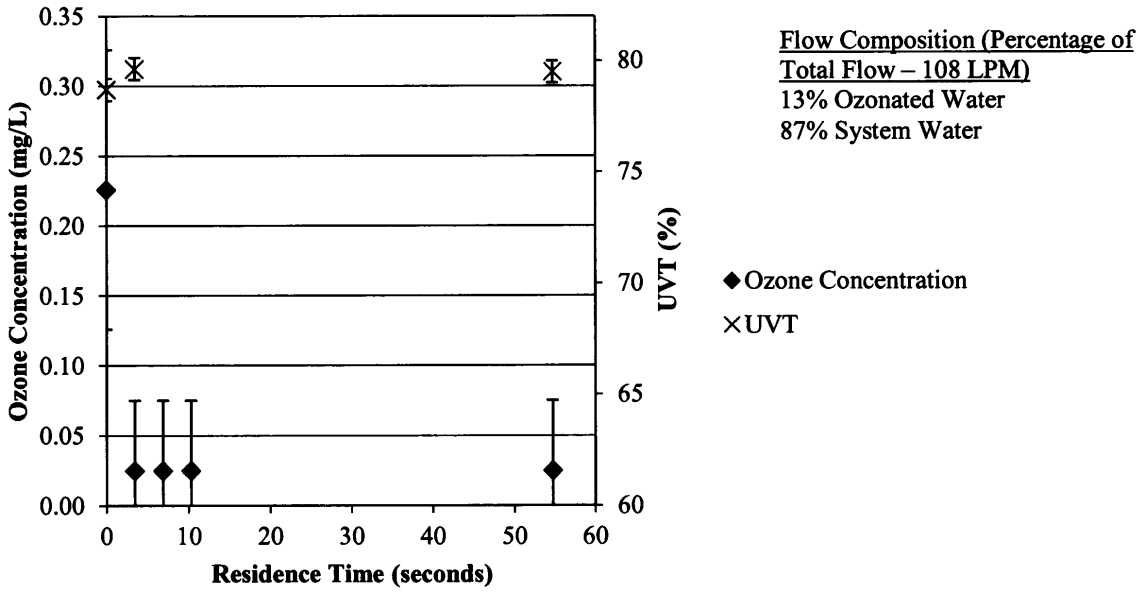

Figure 4-10: Experimental Reactor - UVT Improvement

4.3 Full Scale System Results

4.3.1 UVT Results

Throughout the second half of the study, data was collected daily at the Buckmans Creek hatchery (BCH) to monitor UVT, make-up water, and feed rate. Figure 4-11, is a graph of the data collected over the entire duration of the time spent at BCH.

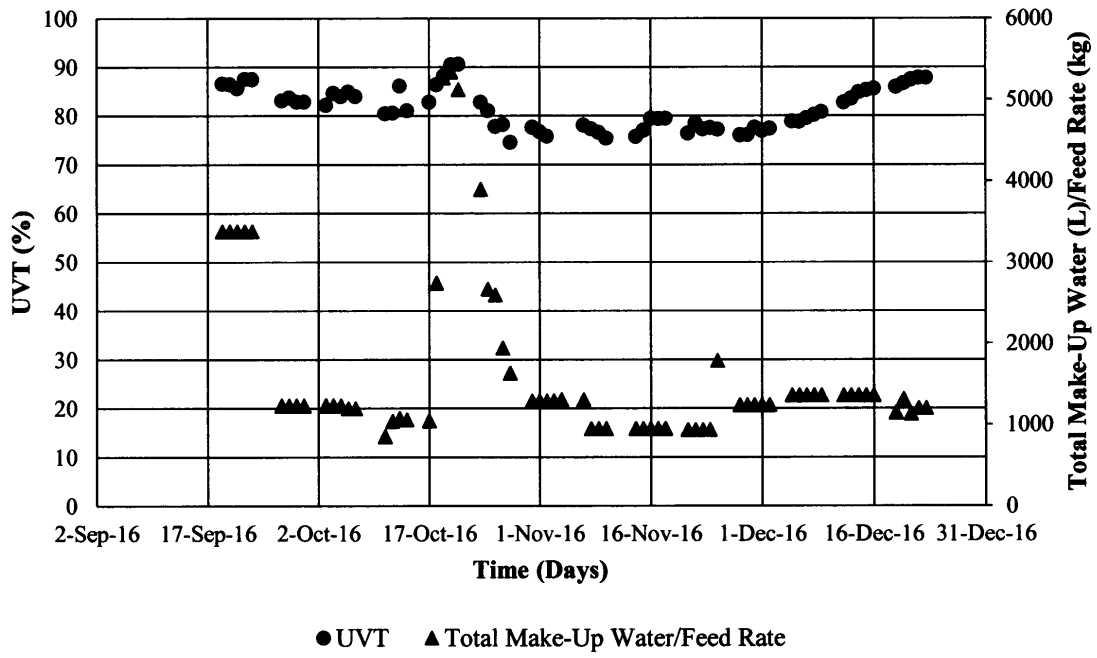

Figure 4-11: Full-Scale Ozone Treatment - UVT Results

During this time, the ozone dosage varied significantly at different times in the project. The ozone treatment system was commissioned on October 12th, 2016 and was then purged until October 13th, 2016. The system began running on October 14th, 2016. However, ozone dosage was limited during the initial start-up due to delays with the ORP probe, which was required for the residual ozone alarm system. At this point in time, ozone was being dosed simply to complete initial experiments with the experimental ozone

reactor and to troubleshoot the full-scale system. The total ozone dosage cumulatively injected over the course of the entire day did not exceed 1 g O_3/kg feed during this time. Therefore, the initial period from September to October can be considered a baseline measure of UVT in the system operating without ozone treatment.

The total make-up water over the feed rate is a measure of the UV absorbing compounds which are being generated or removed from the system without considering ozone treatment. Make-up water is clean water, which is exchanged with re-use water in the system to flush out toxic compounds and improve water quality. Thus, if more make-up water is being used the UVT of the system should increase. The feed rate generates the UV absorbing compounds and will deteriorate the water quality when increased. Therefore, UVT should increase as the ratio of total make-up water over feed rate increases.

During the initial period without ozone treatment, the UVT stayed roughly the same when no change occurred in the total make-up water to feed rate ratio. This is expected as it indicates that the system was operating under roughly the same conditions in terms of feed addition and water exchange.

On October 31st, 2016, ozone began being injected into the system for the entire working day (roughly 8 hours per day), but was not dosed through the night. This limited the ozone dosage significantly, normally ozone should be injected continuously throughout the entire day (24 hours) but a second issue arose with the ORP probe which delayed the alarm system. In addition, during this time an issue arose with water quality, so the make-up water was increased significantly, which caused the peak in both parameters during this period. Even though the ozone dosage increased, very little change occurred in system behavior. The UVT remained roughly constant once the make-up water flow and feed rate

returned to normal values indicating that the daily ozone dosage was not high enough to improve UVT in the system. This was the expected result as the daily dosage of ozone was roughly 4 g O_3/kg feed which is much lower than the recommended dosage guidelines given in literature. In addition, any progress made during the day to improve UVT was most likely undone overnight when no ozone entered the system.

The final period of interest is after December 12, 2016, the ORP probe was reacquired and installed to monitor residual ozone in the system, which allowed for continuous ozone treatment. To evaluate the effects of ozone on the system, a 5-day trial was completed with a continuous ozone dosage and no change in the system parameters (total make-up water flow rate and feed rate). The UVT results of this trial are shown in Figure 4-12.

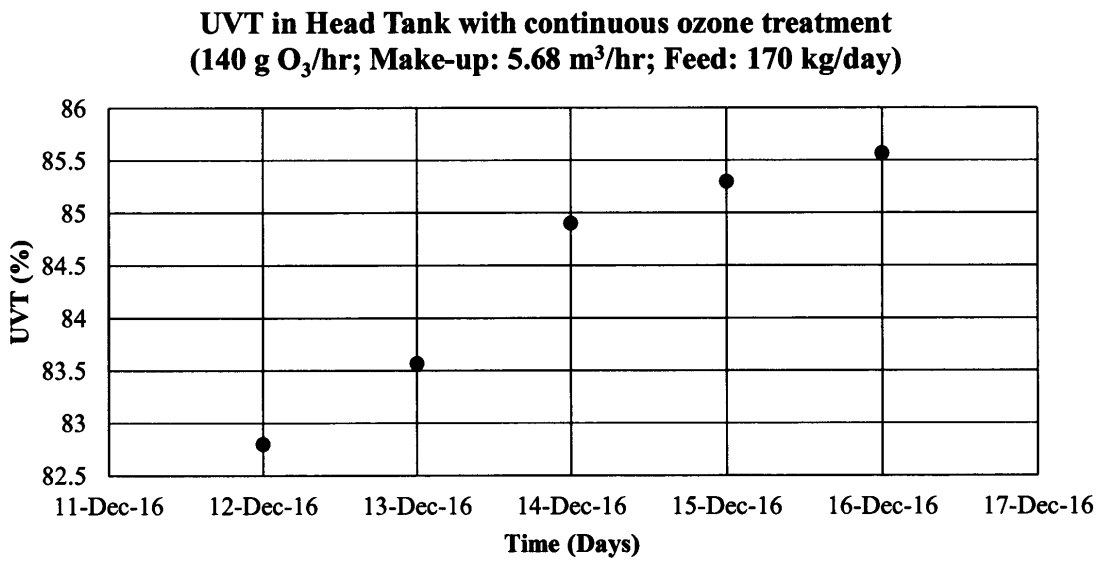

Figure 4-12: Full-Scale Ozone Treatment – Continuous Treatment Week 1

During the 5-day trial, the ozone dosage was kept constant at 140 g O_3 per hour, the make-up water flow rate was 95 liters per minute, and the feed rate was 170 kg per day. This equates to a daily ozone dosage of 19.8 g O_3/kg feed, which led to an increase of UVT from 82.8% to 85.6% over the course of the week. The results indicate that the previous ozone dosages were too low, and more ozone was required to make an observable impact on the system as expected based on literature guidelines. In addition, based on the observed changes in UVT, it appeared that a more substantial increase in UVT occurred overnight which corresponds to the change in feed rate. During the night, the feed rate is lower because the fish are only fed by the automated feeding system. Thus, the ozone dosage is higher, which should lead to a greater impact on UVT.

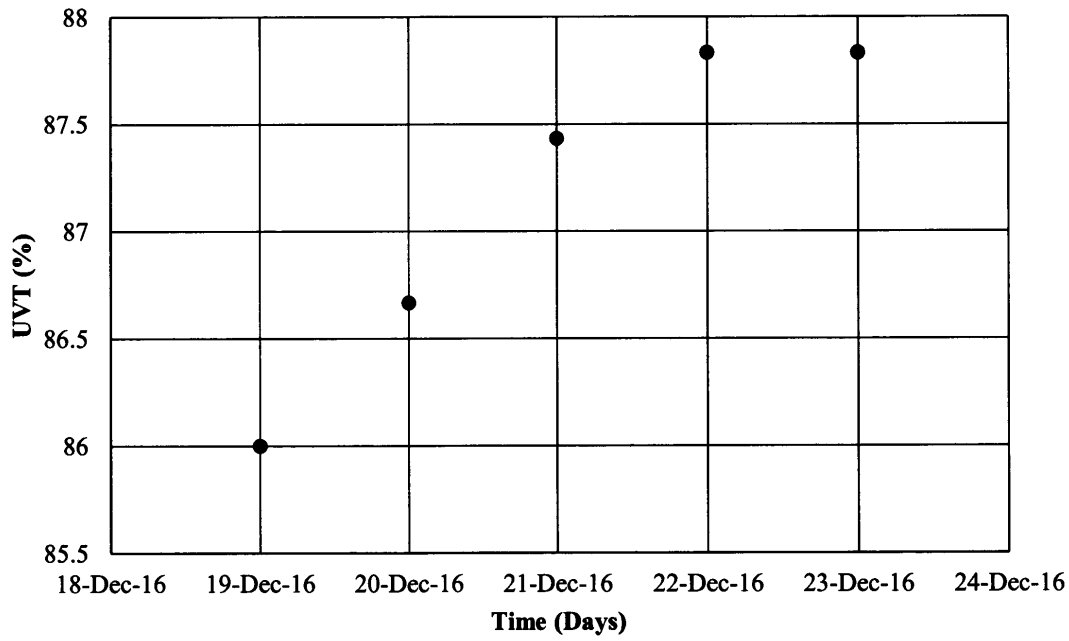

Figure 4-13: Full-Scale Ozone Treatment – Continuous Treatment Week 2

The ozone dosage and make-up water flow rate remained constant during the following week. However, the feed rate had to be changed due to the water temperature of the facility. Figure 4-13, depicts the UVT results for this time-period. During the second week, the feed rate varied between roughly 170-200 kg/day and was never lower than that of the previous week. Interestingly, the UVT continued to rise even with a higher feed rate entering the system. At the end of this period, the UVT plateaued around the 88% mark. This could be an indication that UVT was approaching its maximum value at the given feed rate. It is unlikely that UVT could reach 100% at this ozone dosage because the concentration of ozone entering the full-scale contact system is much smaller than the expected total instantaneous ozone demand.

4.3.2 Color Results

Color measurements were completed in conjunction with the UVT measurements. All system conditions mentioned in the previous section apply for these measurements because they were obtained during the same time period. The graph shown in Figure 4-14, illustrates the change in color over time in the BCH water.

During the time between September to late October, the color measurements tended to stay in a consistent range and started to trend upward towards the latter half of October. This trend reflects the accumulation of refractory organic compounds which resist biodegradation in the system. As mentioned previously, 8-hour ozone dosing began on October 31, 2016. At roughly this point, the color begins to trend downwards even though the total make-up water over feed rate is decreasing. It seems that even at small daily doses,

ozone can eliminate some of the color present within the system. As the daily ozone dosage is maintained, the color in the system decreases.

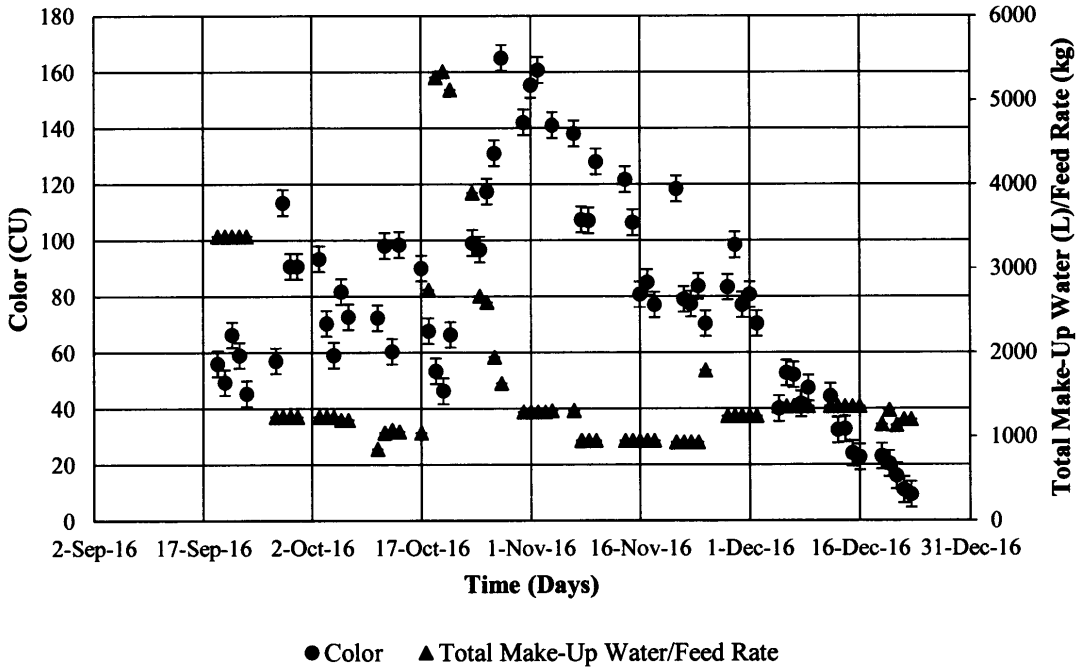

Figure 4-14: Full-Scale Ozone Treatment – Color Results

At the beginning of the 24-hour continuous ozone treatment, color was very low in comparison to the value measured at the beginning of November although the total make-up water to feed rate ratio was the same. Color descended from a peak of 160 CU to roughly 44 CU, which is a 73% decrease in color. After the start of the 24-hour ozone treatment, the color reduced even further from 44 CU to a minimum of 9 CU. Over the course of ozone treatment, the total color was reduced by 94%. This result was expected as results outlined previously in the literature review quoted similar values of roughly 90% color removal.

These results seem to indicate that a smaller dose of ozone is required for color removal than for the removal of UVT absorbing compounds. During the period where ozone was being dosed solely on an 8-hour time frame, the UVT measurements changed very little. However, a rapid decrease was observed in the color measurements. This coincides with the ozone dosage guideline for color destruction provided in the literature review section, which was 7-15 g O_3/kg feed (Christensen, Rusch, & Malone, 2000). This value can be contrasted with the guidelines for water quality improvement of 10-15 or 13-24 g O_3/kg feed (Gonçalves & Gagnon, 2011; Timmons, Ebeling, Wheaton, Summerfelt, & Vinci, 2007).

4.3 Ozone Treatment in RAS

Experimental results obtained in the experimental reactor and full scale reactor helped provide insight into the implementation of ozone treatment in RAS. The following section will primarily be focused on discussing the findings outlined above and how each can be applied in a practical manner to benefit current and future ozone treatment projects.

Ozone reaction kinetics in the RAS showed similar behavior to the ozonation of wastewater. In all experimental reactor trials, the initial ozone concentration was consumed almost immediately by the instantaneous ozone demand. This immediate ozone consumption was measured after seconds at the first sampling port, but most likely occurred even faster within the reactor. From a practical standpoint, this means that very little residence time needs to be provided for ozone consumption when it is being dosed to meet the instantaneous ozone demand. In fact, both ozone contact systems implemented in the two hatcheries provided a large surplus of excess residence time which was not

required. However, these contact systems did take advantage of existing infrastructure in both hatcheries. In future projects, this finding provides more flexibility in selecting existing infrastructure which may provide significantly less residence time. In addition, if a new closed vessel needs to be constructed, it can be sized to provide residence time in the seconds range instead of minutes.

Instantaneous ozone demand consumed the entire initial ozone concentration in the experimental reactor system trials and a sizable portion of the ozone dosed in the ozone side-loop. Therefore, when attempting to control ozone dosage the IOD should be considered of primary importance to quantify ozone demand. The slow decay portion of the ozone consumption is negligible in comparison. This means that any monitoring of ozone concentration in an RAS can be simplified to include only a single ozone sensor which measures the ozone concentration just after the injection point.

After completing the full-scale ozone trials, it was clear that the best method of ozone dosing was continuous treatment in the Buckmans Creek hatchery. A notable change in water quality was only observed after 24-hr continuous ozone treatment began at the highest possible ozone dosage. Continuous ozone treatment is required because feed is continually being introduced into the system which through fish metabolic processes creates additional ozone consuming compounds at various times of the day. It could be argued that ozone should be dosed through batch treatments at higher doses periodically throughout the day. However, this creates a problem because these ozone doses would be limited by the ozone demand of the water flow to prevent any ozone residual. Therefore, to maximize water quality, continuous ozone treatment should be applied to the system at a controlled dose which matches the ozone demand of the system water.

Upon completion of the initial analysis of the experimental results and identification of the key ozone treatment implementation requirements; it became clear that a better method of ozone dosage was required. As mentioned previously, ozone is typically dosed manually by adjusting the power on the ozone generator. If, as discussed, ozone is going to be dosed continuously over a 24-hour period to meet the instantaneous ozone demand a better method must be implemented than manual control and the ozone demand must be quantified to ensure literature guidelines are valid in the Buckmans Creek hatchery.

4.4 Steady State UVT Model

Before discussing the steady state UVT model, a few limitations of the model should be mentioned:

1. The model does not account for water temperature variation which can change the ozone reaction kinetics and rate of ozone consumption. Typically, in RAS temperature variance is not significant because it is well controlled to ensure proper conditions for the cultured aquatic species.
2. Variation in the concentration and composition of dissolved organic carbon present within the RAS water due to equipment and feed type is not accounted for within the model. To maximize accuracy, UVT measurements (corresponding to the locations discussed in the model) should be taken within the system being studied to account for the variation.

Literature guidelines for ozone dosage are typically given based on grams' ozone per kilogram of feed. One study states that both water quality and fish health can be

improved by adding approximately 13-24 grams of ozone for every kilogram of feed fed to the recirculating aquaculture system (Timmons M. B., Ebeling, Wheaton, Summerfelt, & Vinci, 2001). While another, recommends 10-15 grams of ozone for every kilogram of feed fed (Gonçalves & Gagnon, 2011).

The results gathered in both the experimental reactor and full-scale systems were excellent in demonstrating the effects of ozone on water quality at the specified dosage. However, the ultimate objective was to evaluate literature ozone dosage guidelines and determine an optimum dosage. To determine the optimum ozone dosage, a single pass steady state model was created for both the experimental and full-scale ozone systems. This model could predict the ozone dosage which would lead to the full oxidation of UV absorbing compounds (at a wavelength of 254 nm) in terms of total ozone consumption. UVT was selected because it encompassed many of the primary aromatic compounds which react with ozone and could be used as a surrogate parameter for many water quality parameters. Also, due to the vast number of organic compounds contained in the water, it was unfeasible to monitor total individual water compound composition change due to ozone oxidation.

Before the derivation of the steady state mass balances, the UVT had to be altered into a parameter, which could be used as a measure of concentration. The first step, was to convert UVT into UV absorbance (UVA),

$$UVA = -\ln\frac{UVT}{100} \tag{4}$$

The conversion is simple because UVA and UVT are essentially just different representations of the same phenomenon. However, UVA is directly proportional to the

concentration of UV absorbing compounds according to Beer's law. Beer's law was used to convert the UV absorbance into the concentration of UV absorbing compounds in the water,

$$UVA = \varepsilon \cdot l \cdot C_{UV} \tag{5}$$

This equation was rearranged to,

$$C_{UV} = \frac{UVA}{\varepsilon \cdot l} \tag{6}$$

Where: *UVA* is the ultraviolet light absorbance of the water sample;

ε is the molar absorptivity of the organic compounds in the water sample (L/g·cm);

l is the length of the ultraviolet light transmittance cell containing the water sample being measured (cm);

C_{UV} is the concentration of ultraviolet light absorbing compounds in the water sample (g/L).

Beer's law equates the absorbance of a sample to the concentration of absorbing compounds in a solution using molar absorptivity (ε) and cell length (l).

To begin, a steady state mass balance was derived for the concentration of UV absorbing compounds in the overall system:

$$In = Out$$

or, if the concentration of UV absorbing compounds in the make-up water is negligible,

$$F \cdot a = Q_m \cdot C_{UV} + \dot{m}_{O_3} \cdot b \tag{7}$$

Where: F is the feed rate entering the system (kg/s);

a is the UV absorbing compound generation coefficient (g/kg);

Q_m is the make-up water flow rate (L/s; same as effluent water flowrate);

C_{UV} is the concentration of UV absorbing compounds in the system (g/L);

$\dot{m}_{O_3}$ is the mass flow rate of ozone being injected into the system (g/s);

b is the coefficient for the destruction of UV absorbing compounds by ozone (g/g O_3).

The maximum ozone dosage is attained when $C_{UV} = 0$, therefore,

$$F \cdot a = \dot{m}_{O_3} \cdot b \tag{8}$$

Which can be rearranged to give,

$$\frac{\dot{m}_{O_3}}{F} \Big|_{\text{maximum}} = \frac{a}{b} \tag{9}$$

Note that it is implicitly assumed in the above equation that all UV absorbing compounds are reactive with ozone. If only a fraction (Y) of the UV absorbing compounds can react with ozone, a in the above equation should be multiplied by Y. To determine the maximum ozone dosage, the coefficients for the generation and destruction of UV absorbing compounds must be obtained. Therefore, steady state mass balances had to be completed on the culture tanks and ozone contactor.

UV absorbing compounds are generated in the system through the digestion of feed by the cultured organisms. Thus, a steady state mass balance was completed on the culture tanks to determine the UV absorbing compound generation coefficient.

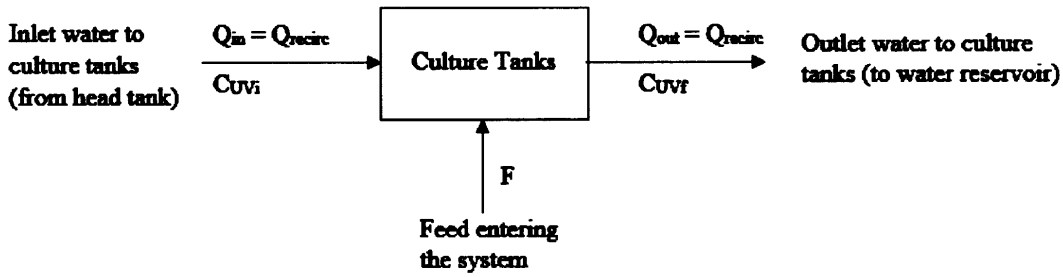

Figure 4-15: Steady State Mass Balance – Culture Tanks

Figure 4-15, is a schematic that was used as a basis for the steady state model. To simplify the model, the 8 culture tanks in the system were grouped into a single culture tank which accepted all system flow and feed. The steady state mass balance on the UV absorbing compounds in the culture tanks is the following:

$$In = Out$$

or,

$$Q_{recirc} \cdot C_{UVi} + F \cdot a = Q_{recirc} \cdot C_{UVf} \tag{10}$$

This expression can be simplified to,

$$a = \frac{Q_{recirc}(C_{UVf} - C_{UVi})}{F} \tag{11}$$

Where: Q_{recirc} is the recirculation flow of the system (L/s);

C_{UVi} is the initial concentration of UV absorbing compounds entering the culture tanks (g/L);

C_{UVf} is the final concentration of UV absorbing compounds exiting the culture tanks (g/L);

To determine the maximum ozone dosage, the UV absorbing compound destruction coefficient "*b*" also had to be obtained. Two methods were used to obtain this coefficient; a steady state mass balance on the experimental ozone reactor and the full-scale ozone reactor. To start, the steady state mass balance on the experimental reactor will be presented.

The schematic used to generate the steady state mass balance on the experimental reactor is shown in Figure 4-16. The inlet stream entering the experimental ozone reactor is a mixture of the ozonated water and untreated water from the water reservoir. Therefore, a calculation must be completed to account for the water which has already been treated with ozone.

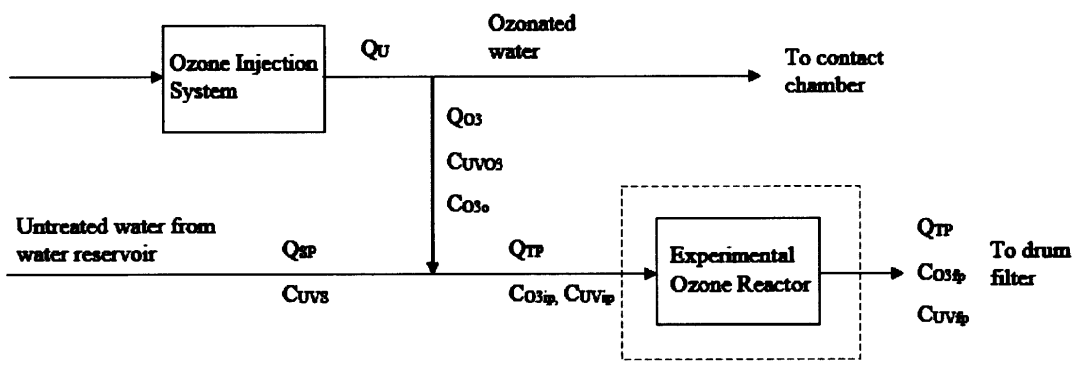

Figure 4-16: Steady State Mass Balance – Experimental Ozone Reactor

The following calculations were completed to account for the mixed flow entering the ozone experimental reactor:

$$C_{UVip} = \frac{Q_{O_3} \cdot C_{UVO3} + Q_{SP} \cdot C_{UVS}}{Q_{TP}} \quad (12)$$

Where: C_{UVip} is the initial concentration of UV absorbing compounds entering the experimental reactor (g/L);

Q_{O_3} is the flow rate of ozonated water to the experimental reactor (L/s);

C_{UVO3} is the concentration of UV absorbing compounds in the ozonated water (g/L);

Q_{SP} is the flow rate of system water entering the experimental reactor (L/s);

C_{UVS} is the concentration of UV absorbing compounds in the system water (g/L);

Q_{TP} is the total flow rate of water passing through the experimental reactor ($Q_{O_3} + Q_{SP}$; L/s).

The initial concentration of UV absorbing compounds entering the experimental reactor had to be calculated to account for the differing concentrations in the ozonated and system water. Please note that before a UVT measurement was taken in the ozonated water, all residual ozone had to be eliminated to prevent interference through ozone UV-light absorbance. In all trials, any samples containing ozone were aerated until no residual ozone could be detected. Each UV absorbing compound concentration was measured independently because after mixing the ozone reaction proceeded almost instantaneously with the untreated system water. Similarly, the inlet ozone concentration had to be calculated; otherwise, the instantaneous ozone demand would interfere with the initial ozone concentration measurement. The inlet ozone concentration is given by,

$$C_{O_3ip} = \frac{Q_{O_3} \cdot C_{O_3o}}{Q_{TP}} \quad (13)$$

Where: $C_{O_{3ip}}$ is the initial ozone concentration entering the experimental reactor (g/L);

$C_{O_{3o}}$ is the residual ozone concentration in the ozonated water (g/L).

Equation (13), is like equation (12); however, it contains only a single term because no ozone is present in the untreated water. With both flows adjusted, the steady state UV absorbing compound mass balance on the experimental reactor can be written as follows,

$$In = Out$$

or,

$$Q_{TP} \cdot C_{UVip} = Q_{TP} \cdot C_{UVfp} + Q_{TP} \cdot b(C_{O_{3ip}} - C_{O_{3fp}}) \quad (14)$$

This expression can be rearranged to,

$$b = \frac{C_{UVip} - C_{UVfp}}{C_{O_{3ip}} - C_{O_{3fp}}} \quad (15)$$

In the second method, a steady state mass balance was derived for the full-scale ozone reactor depicted in Figure 4-17. To simplify, both ozone contactors were grouped into a single process unit which treated all the system water. Analogous to the experimental reactor mass balance, the full-scale model begins by determining the initial value of UV absorbing compounds entering ozone treatment. Equation (12) can be used to make this adjustment by simply including the ozone contact chamber parameters.

Once the initial concentration of UV absorbing compounds entering the full-scale reactor has been calculated (C_{UVC}), an adjustment must be made to the initial ozone concentration to account for the dilution of the system water. Equation (13) can be used to

determine the initial ozone concentration; the parameters just need to be changed to the full-scale parameters.

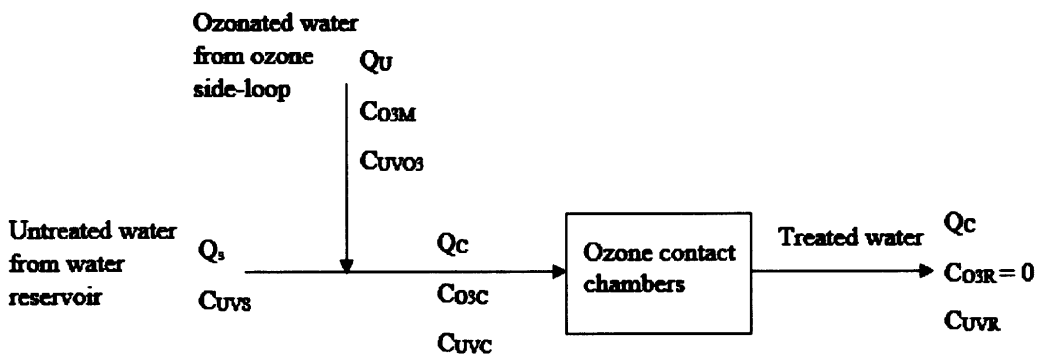

Figure 4-17: Steady State Mass Balance – Full-Scale Ozone Contact Chambers

The overall steady state mass balance can then be written as follows,

$$Q_C \cdot C_{UVC} - Q_C \cdot b(C_{O_{3C}} - C_{O_{3R}}) = Q_C \cdot C_{UVR} \tag{16}$$

or,

$$b = \frac{C_{UVC} - C_{UVR}}{C_{O_{3C}} - C_{O_{3R}}} \tag{17}$$

The result is identical to equation (15), but written in terms of the full-scale system parameters. In the experimental reactor system, the untreated water is being dosed by residual ozone in the ozonated water.

Now that the steady-state models have been derived, the parameters which were mentioned previously at the beginning of this section can be addressed. Each instance where the concentration of UV absorbing compounds was portrayed was defined as,

$$C_{UV} = \frac{UVA}{\varepsilon \cdot l} \tag{18}$$

Due to the vast number of organic compounds present in water, it was unfeasible to define a value for the molar absorptivity (ε) before and after oxidation occurred. For this reason, the approximation had to be made that the molar absorptivity remained constant throughout the system and did not change after ozone treatment. Therefore, the coefficients *a'* and *b'* had to be created which encompassed the molar absorptivity through the following mechanism which applies for both coefficients:

Equation (11) can be rewritten in terms of UV absorbance (*UVA*),

$$a = \frac{Q_{recirc}\left(\frac{UVA_f}{\varepsilon \cdot l} - \frac{UVA_i}{\varepsilon \cdot l}\right)}{F} \tag{19}$$

The molar absorptivity (ε) and path length (l) can be extracted from equation (19),

$$a = \frac{Q_{recirc}(UVA_f - UVA_i)}{F} \cdot \left(\frac{1}{\varepsilon \cdot l}\right) \tag{20}$$

Equation (20) is then multiplied by the molar absorptivity (ε) and path length (l),

$$a \cdot \varepsilon \cdot l = \frac{Q_{recirc}(UVA_f - UVA_i)}{F} \tag{21}$$

The *a'* coefficient can be defined as,

$$a' = a \cdot \varepsilon \cdot l \tag{22}$$

Using the same method, equation (15) can be rewritten as,

$$b' = \frac{UVA_{ip} - UVA_{fp}}{C_{O_{3ip}} - C_{O_{3fp}}} \tag{23}$$

or,

$$b' = b \cdot \varepsilon \cdot l \tag{24}$$

Based on this approximation, the coefficients obtained from the steady state mass balances were the *a'* and *b'* coefficients. The calculated values of these coefficients are reported in Table 4-1.

Table 4-1 - Steady State Mass Balance Coefficients

Steady State Mass Balance Coefficients	Average Coefficient Value
Experimental Reactor – *b'* coefficient	0.031 ± 0.008 $m^3/g\ O_3$
Full-Scale Reactor – *b'* coefficient	0.036 ± 0.007 $m^3/g\ O_3$
Fish Culture Tanks – *a'* coefficient	0.639 ± 0.147 m^3/kg feed

The average value of the *b'* coefficient in both reactors is approximately equal, which was the expected result because the water consuming ozone in both cases is from the same source. To calculate the optimum ozone dosage; outliers were eliminated, then both the experimental reactor and full-scale reactor *b'* coefficients were averaged; the resulting value was 0.032 $m^3/g\ O_3$.

One problem remains, the actual coefficients (*a*, *b*) are required to calculate the optimum ozone dosage. However, the approximation that the molar absorptivity (ε) remains constant can be used to obtain the optimum ozone dosage:

$$\frac{a'}{b'} = \frac{a \cdot \varepsilon \cdot l}{b \cdot \varepsilon \cdot l} \tag{25}$$

If molar absorptivity (ε) and path length (l) are constant,

$$\frac{a'}{b'} = \frac{a}{b} \tag{26}$$

Under these conditions, both values are equivalent. Therefore, based on equation (25), the maximum ozone dosage can be obtained by dividing the average a' coefficient by the average b' coefficient; the result was a maximum ozone dosage or expected ozone demand of 21.9 ± 2.8 g O_3/kg feed.

Based on the findings of the model, it appears that the literature guidelines (Gonçalves & Gagnon, 2011; Timmons M. B., Ebeling, Wheaton, Summerfelt, & Vinci, 2001) are in fact applicable to the Buckmans Creek hatchery and can be used as a general "rule of thumb". For a more detailed and accurate ozone dosage estimation, seasonal effects and varying feed types must be accounted for in the system. Nonetheless, feed levels generate a large portion of the ozone demand and this general estimation will only require minor changes. In these steady state mass balances, the ozone dosage is based on the UV absorbing compounds which are effectively a surrogate measurement of the total dissolved organic matter. In recirculating aquaculture systems, there is typically no direct method to remove the non-biodegradable dissolved organic matter in the water besides ozone treatment.

Unfortunately, this steady state UVT model cannot be used to automatically control the ozone dosage in the full-scale ozone treatment system due to the required parameters. Several of the parameters (feed rate, make-up water flow rate, etc.) require manual input

into the system at the Buckmans Creek hatchery. Therefore, nothing would be gained by implementing a control system that relied on this model because it would still require daily manual control and consistent parameter inputs from personnel. However, with minor adaptation, the steady state UVT model can be used as an effective tool to conduct evaluations on ozone treatment systems which are currently operating through manual control. In addition, it is useful for the design of RAS for determining the capacity of the ozonation system.

4.5 Dissolved Ozone Control Model

A method of control for the full-scale system is developed in the following section for future implementation. The method works by monitoring the consumption of ozone in the side stream which is used to deliver ozonated water to the full-scale ozone contact chambers. If the side-loop is altered to utilize untreated system water instead of the water exiting the contactor, the ozone demand exerted in the side-loop should be directly proportional to the full-scale system ozone demand on a volume basis. The ozone demand exerted in the side loop can then be used to predict the full-scale ozone demand to prevent any ozone residual from leaving the reactor. It simply must be adjusted to account for the change in the flow rate of untreated water encountering the ozonated water.

Figure 4-18, is an overview process flow diagram of the control system which is recommended for the full-scale system. As mentioned previously, this diagram has only one minor change in comparison to the current set-up, the untreated water from the water reservoir must be used in the ozone side-loop. Just before the ozonated water is combined with the system water, a dissolved ozone monitor will be placed to continuously measure

the amount of residual ozone. The dissolved ozone monitor will measure the concentration of ozone after consumption in the side stream has occurred and relay this information to the control station, which will calculate the ozone consumption by subtracting this value from the expected ozone output of the ozone generator. The ozone consumption will then be compared to the remaining ozone residual which is being fed into the full-scale system. If the remaining ozone concentration (measured at the dissolved ozone monitor) exceeds the predicted ozone consumption of the untreated water, the dosage will result in residual ozone exiting the contactor. In this case, the controller would reduce the generation of ozone gas in the generator to a level which matched the ozone consumption of the system. If the opposite occurred and the ozone consumption was much higher than the residual ozone, the controller would increase the ozone dosage.

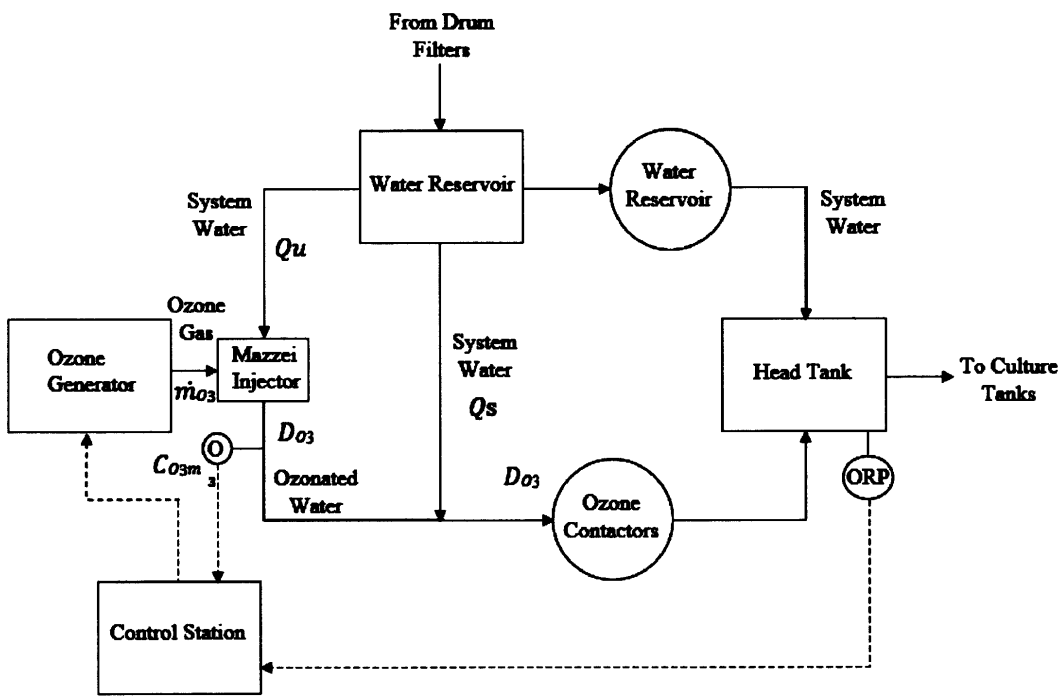

Figure 4-18: Full-Scale Ozone Treatment Control System

Accurate prediction of the instantaneous ozone demand (IOD) exerted by the untreated water is very important because this portion of the ozone consumption removes a significant percentage of the initial ozone concentration in wastewater. A steady state model was derived in the ozone side loop between the ozone injection point and the dissolved ozone monitor,

$$inlet + transferred = outlet + consumed$$

or, if the untreated water contains no ozone,

$$\dot{m}_{O_3} = D_{O_3} Q_u + Q_u C_{O_3 m} \tag{27}$$

Where: $\dot{m}_{O_3}$ is the mass flow rate of ozone being injected into the system (g O_3/s);

D_{O_3} is the instantaneous ozone demand (g O_3/L);

$C_{O_3 m}$ is the concentration of ozone measured by the ozone monitor (g O_3/L);

Q_u is the flow rate of untreated water entering the ozone side-loop (L/s).

The term on the left side of the equation is the mass flow rate of ozone from the generator which is assumed to be transferred entirely into the untreated water in the side-loop. The right-hand side represents the ozone consumption from the instantaneous ozone demand and the residual ozone which remains after ozone reaction. In wastewater, all the ozone reacts through the instantaneous ozone demand as confirmed by the experimental scale trials. Therefore, the slow ozone decay was considered negligible in the mass balance.

The model could then be rearranged to determine the instantaneous ozone demand occurring in the ozone side-loop,

$$D_{O_3} = \frac{\dot{m}_{O_3}}{Q_u} - C_{O_3m} \tag{28}$$

Instantaneous ozone demand (IOD) will remain equal in the ozone side-loop and full-scale ozone contactor system because it is a concentration value in terms of untreated water flow. It only requires an adjustment if the total liquid flow rate in the system becomes a combination of pre-ozonated water and untreated water. In this case, the IOD simply needs to be multiplied by the fraction of the total flow which is untreated.

At this point, a prediction of the full-scale system ozone consumption can be made using another steady state mass balance. If the slow decay step of ozone is once again considered negligible and no residual ozone is present, the equation simplifies to,

$$C_{O_3SP} = D_{O_3} \cdot \frac{Q_s}{Q_u} \tag{29}$$

Where: C_{O_3SP} is the desired concentration of ozone measured at the dissolved ozone monitor (g/L);

Q_s is the system water flowrate of the full-scale system (L/s).

The ratio of the system water and ozonated water will remain the same during operation, unless equipment in the system is changed. Therefore, the control system can be viewed as a comparison between the instantaneous ozone demand and the measured concentration at the dissolved ozone monitor. The control system will function by using the instantaneous ozone demand to calculate the desired set point ozone concentration which results in no ozone residual. The desired ozone concentration can then replace the

ozone concentration measured by the dissolved ozone monitor in equation (28) to calculate the required ozone dosage from the generator ($\dot{m}_{O_3}$),

$$\dot{m}_{O_3} = D_{O_3}(Q_u + Q_s) \tag{30}$$

As a secondary safety mechanism, an ORP probe (see Figure 4-18) will also be connected to the control station. If the ORP rises over a safe limit because of residual ozone, the control station will send a signal to the ozone generator to halt the production of ozone. Normal operation will resume once the ORP is reduced to a safe level. This system will act as a safeguard, in case an issue arises with the dissolved ozone monitor.

The major benefit of this control system in comparison to the ORP probe system which is typically used, is that this system can predict an ozone residual before it occurs in the full-scale system. When using an ORP probe, the residual ozone must already be present to alert the control system that the ozone demand has been exceeded. Therefore, the risk of fish exposure to residual ozone is increased in a control system using an ORP probe.

Chapter 5 – Conclusions and Recommendations

5.1 Conclusions

The results of this experimental work indicate that the consumption of ozone occurs through a two-step kinetic process; instantaneous ozone demand and a slow ozone decay. In addition, the magnitude of each reaction step is dependent on the amount of dissolved natural organic matter constituents present within the water and whether the water has been previously treated by ozone. When the system water was treated with ozone in experimental reactor trials, the entire initial ozone dosage was consumed by the instantaneous ozone demand.

Correlations generated between ultra-violet light transmittance (UVT) and several water quality parameters demonstrated strong relationships. These results indicate that recirculating aquaculture system water can be accurately characterized by ultra-violet light transmittance measurements (254 nm). Unfortunately, these correlations were not unique, they changed depending on the fraction of the organic constituents present in the water which absorb UV light. Caution should be taken when measuring the UVT of ozonated water as it is able to absorb UV-light at the 254 nm wavelength.

The BOD and COD of recirculating aquaculture water were determined using standard methods. The BOD and COD were found to be in the range of 8 mg/L and 43 mg/L in unfiltered recirculating aquaculture system water, respectively. This result indicates that refractory COD builds up in recirculating aquaculture systems over time. However, biodegradable BOD is removed within the system. This is a strong indication

that ozone will have a positive effect in recirculating aquaculture systems due to its proven ability to increase the biodegradability of refractory organic matter.

During the research project, ozone treatment was running in the full-scale system to varying degrees. For the most part, the ozone dosage was at a degree which was cumulatively too low to show any observable change in water quality. However, for approximately a weeklong period beginning on December 12th, 2016, ozone was operating continuously at the highest available dosage (19.8 g O_3/kg feed) at a continuous feed rate and make-up water flow rate. The result of this prolonged trial was an increase of ultra-violet light transmittance from 82.8% to 85.6% and a decrease in measurable color from 44 CU to 9 CU. These results indicate that ozone treatment can have a significant positive impact on water quality.

A steady state model was created based on ultra-violet light transmittance measurements to determine the optimal ozone dosage in the recirculating aquaculture system based on the feed rate and UV-light transmittance change across the ozone contactors. The model resulted in an ozone demand estimate of 21.9 ± 2.8 g O_3/kg feed. This estimate is in agreement with the high range of literature guidelines (13-24 g O_3/kg feed), and validated the use of these guidelines within the recirculating aquaculture system.

5.2 Recommendations

Based on the experimental results, it was found that very little residence time is required for ozone consumption because it is dominated by the instantaneous ozone demand (IOD). Therefore, in future projects ozone contact vessels can be sized to provide only a few seconds of residence time if ozone is being dosed to match the IOD.

A control strategy was created based on the instantaneous ozone demand, which avoids the presence of residual ozone caused by overdosing. It functions by calculating the instantaneous ozone demand in the ozone side-loop and applying this value to the full-scale ozone treatment system. The instantaneous ozone demand can then be used to calculate a desired ozone concentration at the ozone contactor inlet which will result in no ozone residual exiting the contactor. Once calculated, the desired ozone concentration can be used to determine the ozone dosage which should be inputted by the ozone generator through the Mazzei injector. As the system operates, the control system will continuously adjust the ozone dosage based on the instantaneous ozone demand to prevent ozone residual. As a back-up monitor, an ORP probe will be placed at the exit of the ozone contactor. It is recommended that this system is implemented and tested at the Buckmans Creek hatchery because very little additional infrastructure is required. If the control system is successful, it can be implemented in current and future systems to eliminate manual ozone control.

Although the steady state UVT model does not provide an optimal platform for a control system it is recommended that it be used in future ozone treatment design projects to help determine the required ozone treatment capacity. In addition, it could be used at current sites which have ozone treatment to evaluate whether ozone is being dosed optimally within the system. Especially, in ozone treatment systems which are currently

being controlled manually. Also, applying the model to several different RAS could help define the variation which has been shown to occur in individual systems utilizing ozone treatment.

Bibliography

American Public Health Association, American Water Works Association, Water Environment Federation. (2015). *Standard Methods for the Examination of Water and Wastewater.* Standard Methods Committee.

Beltrán, F. J., Encinar, J. M., & García-Araya, M. (1993). Oxidation by ozone and chlorine dioxide of two distillery wastewater contaminants: gallic acid and epicatechnin. *Water Research*, 1023-1028.

Buffle, M. O., Schumacher, J., Salhi, E., Jekel, M., & von Gunten, U. (2006). Measurement of the initial phase of ozone decomposition in water and wastewater by means of a continuous quench-flow system: Application to disinfection and pharmaceutical oxidation. *Water Research*, 1884-1894.

Buffle, M.-O., Schumacher, J., Meylan, S., Jekel, M., & von Gunten, U. (2006). Ozonation and Advanced Oxidation of Wastewater: Effect of Ozone Dose, pH, DOM and HO-Scavengers on Ozone Decomposition and HO Generation. *Ozone: Science & Engineering*, 247-259.

Bullock, G. L., Summerfelt, S. T., Noble, A. C., Weber, A. L., Durant, M. D., & Hankins, J. A. (1997). Ozonation of a recirculating rainbow trout culture system I. Effects on bacterial gill disease and heterotrophic bacteria. *Aquaculture*, 43-55.

Buxton, G. V., Greenstock, C. L., Helman, W. P., & Ross, A. B. (1988). Critical view of rate constants for oxidation of hydrated electrons, hydrogen atoms and hydroxyl radicals (OH°/O°) in aqueous solutions. *Journal of Physical and Chemical Reference Data*, 513-884.

Cho, M. M. (2003). Investigation of Ozone Reaction in River Waters Causing Instantaneous Ozone Demand. *Ozone: Science & Engineering*, 251-259.

Christensen, J. M., Rusch, K. A., & Malone, R. F. (2000). Development of a Model for Describing Accumulation of Color and Subsequent Destruction by Ozone in a Freshwater Recirculating Aquaculture System. *Journal of the World Aquaculture Society*, 167-174.

Criegee, R. (1975). Mechanism of Ozonolysis. *Angewandte Chemie International Edition in English*, 745-752.

Davidson, J., Good, C., Welsh, C., & Summerfelt, S. (2011). The effects of ozone and water exchange rates on water quality and rainbow trout Oncorhynchus mykiss performance in replicated water recirculating systems. *Aquacultural Engineering*, 80-96.

Ebeling, J. M., & Timmons, M. B. (2012). Recirculating Aquaculture Systems. In J. H. Tidwell, *Aquaculture Production Systems* (pp. 245-277). Wiley-Blackwell.

Elovitz, M. S., & Gunten, U. v. (1999). Hydroxyl Radical/Ozone Ratios During Ozonation Processes. I. The Rct Concept. *Ozone: Science & Engineering*, 239-260.

Elovitz, M. S., Gunten, U. v., & Kaiser, H.-P. (2000). Hydroxyl Radical/Ozone Ratios During Ozonation Processes. II. The Effect of Temperature, pH, Alkalinity, and DOM Properties. *Ozone: Science & Engineering*, 123-150.

Food and Agriculture Organization of the United Nations. (2016). *The State of the World Fisheries and Aquaculture.* Rome: Food and Agriculture Organization of the United Nations.

Francis, P. D. (1987). Oxidation by UV and ozone of organic contaminants dissolved in deionized and raw main water. *Ozone: Science and Engineering*, 369-390.

Freese, S. D., Nozaic, D. J., Smith, R. A., & Trollip, D. L. (n.d.). *Ozone Demand Test For High Ozone Demand Waters and Effluents.* Pietermaritzburg: Umgeni Water.

Gonçalves, A. A., & Gagnon, G. A. (2011). Ozone Application in Recirculating Aquaculture System: An Overview. *Ozone: Science & Engineering*, 345-367.

Gora, S., & Chaulk, M. (2011). *Study on Characteristics and Removal of Natural Organic Matter in Drinking Water Systems in Newfoundland and Labrador.* CBCL Limited.

Gottschalk, C., Libra, J. A., & Saupe, A. (2009). *Ozonation of Water and Waste Water: A Practical Guide to Understanding Ozone and its Applications.* Weinheim: Wiley-VCH.

Hach. (2015). *Test Kits & Strips*. Retrieved from Hach: http://www.hach.com/test-strips/test-strips/family?productCategoryId=35547009709

Hoigné, J., & Bader, H. (1983a). Rate constants of reactions of ozone with organic and inorganic compounds in water - I. Non dissociating organic compounds. *Water Research*, 173-183.

Hoigné, J., & Bader, H. (1983b). Rate constants of reactions of ozone with organic and inorganic compounds in water - II. Dissociating organic compounds. *Water Research*, 185-194.

Howe, K. J., Hand, D. W., Crittenden, J. C., Trussell, R. R., & Tchobanoglous, G. (2012). *Principles of Water Treatment.* Hoboken: John Wiley & Sons, Inc.

Langlais, B., Reckhow, D. A., & Brink, D. R. (1991). *Ozone in Water Treatment: Application and Engineering, American Water Works Association Research Foundation.* Michigan: Lewis Publishers Inc.

Laplanche, A., Orta de Velasquez, M., Boisdon, V., Martin, N., & Martin, G. (1995). Modelisation of micropollutant removal in drinking water treatment by ozonation or advanced oxidation processes. *Ozone Science Engineering* , 97-117.

Lenntech. (2016). *Ozone Generation*. Retrieved from Lenntech: http://www.lenntech.com/library/ozone/generation/ozone-generation.htm

Mazzei. (2017). *Venturi Injectors*. Retrieved from Mazzei: http://mazzei.net/venturi_injectors/

Mizuno, T., Tsuno, H., & Yamada, H. (2007). Development of ozone self-decomposition model for engineering design. *Ozone: Science and Engineering*, 55-63.

Ozonia. (2009). *Operating Manual - OZAT CFS-1/3 2G.* Dübendorf: Ozonia.

Rakness, K. L. (2005). *Ozone in Drinking Water Treatment: Process Design, Operation and Optimization.* Denver: American Water Works Association.

Ratpukdi, T., Siripattanakul, S., & Khan, E. (2010). Mineralization and biodegradability enhancement of natural organic matter by ozone-VUV in comparison with ozone, VUV, ozone-UV, and UV: Effects of pH and ozone dose. *Water Research*, 3531-3543.

Rawlinson, P., & Forster, A. (2000). *The Economics of Recirculating Aquaculture.* Australia: Fisheries Victoria.

Rice, R. G., Robson, C. M., Miller, G. W., & Hill, A. G. (1981). Uses of ozone in drinking water treatment . *American Water Works Association*, 44-57.

Ritter, J. A. (2010). *Principles and Practices of Water Supply Operations: Water Quality.* Denver, Colorado: American Water Works Association.

Roustan, M., Debellefontaine, H., Do-Quangq, Z., & Duguet, J.-P. (1998). Development of a Method for the Determination of Ozone Demand of a Water. *Ozone: Science & Engineering* , 513-520.

Shin, J., Hidayat, Z. R., & Lee, Y. (2016). Influence of Seasonal Variation of Water Temperature and Dissolved Organic Matter on Ozone and OH Radical Reaction Kinetics During Ozonation of a Lake Water. *Ozone: Science & Engineering*, 100-114.

Spencer, M. (2016). *The Everyman's Guide to the Miraculous but Misunderstood ORP Sensor.* Andover: Water Online.

Staehelin, J., & Hoigné, J. (1983). Reaktions mechanismus und kinetik des ozonzerfalls in wasser in gengenwart organischer stoffe. *Vom Wasser*, 337-348.

Summerfelt, S. T., & Hochheimer, J. N. (1997). Review of Ozone Processes and Applications as an Oxidizing Aqent in Aquaculture. *The Progressive Fish-Culturist*, 94-105.

Summerfelt, S. T., Hankins, J. A., Weber, A. L., & Durant, M. D. (1997). Ozonation of a recirculating rainbow trout culture system II. Effects on microscreen filtration and water quality. *Aquaculture*, 57-67.

Summerfelt, S. T., Sharrer, M. J., Tsukuda, S. M., & Gearheart, M. (2009). Process requirements for achieving full-flow disinfection of recirculating water using ozonation and UV irradiation. *Aquacultural Engineering*, 17-27.

Summerfelt, S., Bebak-Williams, J., Fletcher, J., Carta, A., & Creaser, D. (2008). Description and Assessment of the Surface Water Filtration and Ozone Treatment System at the Northeast Fishery Center. *American Fisheries Society* .

Timmons, M. B., & Losordo, T. M. (1994). Suspended solids control in recirculating aquaculture systems. In S. Chen, D. E. Coffin, & R. F. Malone, *Aquaculture Water Reuse Systems: Engineering Design and Management* (pp. 61-100). Amsterdam: Elsevir.

Timmons, M. B., Ebeling, J. M., Wheaton, F. W., Summerfelt, S. T., & Vinci, B. J. (2001). *Recirculating Aquaculture Systems.* Ithaca: Cayuga Aqua Ventures.

Tomiyasu, H., Fukutomi, H., & Gordon, G. (1985). Kinetics and mechanisms of ozone decomposition in basic aqueous solutions. *Inorganic Chemistry*, 2962-2985.

United States Department of Labor. (2017, January 17). *Ozone.* Retrieved from Occupational Safety and Health Administration: https://www.osha.gov/dts/chemicalsampling/data/CH_259300.html

Von Gunten, U. (2003). Ozonation of drinking water: Part I. oxidation kinetics and product formation. *Water Research*, 1443-1467.

Wedemeyer. (1996). *Physiology of Fish in Intensive Culture.* New York: Chapman and Hall.

Wenk, J., Aeschbacher, M., Salhi, E., Canonica, S., Gunten, U. v., & Sander, M. (2013). Chemical Oxidation of Dissolved Organic Matter by Chlorine Dioxide, Chlorine, And Ozone: Effects on Its Optical and Antioxidant Properties. *Environmental Science & Technology*, 11147 - 11156.

Appendix A: Ozone Side-Loop – Instantaneous Ozone Demand Data

Table A-1 – Ozone Demand Calculated in the Ozone Side-Loop

Date	Power Setting (W)	Gas Flow (%)	Water Flowrate (m^3/hr)	Initial O3 Conc. (mg/L)	Initial O3 M.flow (g/hr)	O_3 - Residual (mg/L)	Calculated IOD (mg/L)	Total O_3 Consumption (mg/L)
28-Oct-16	650	25	23.4	3.65	85.4	0.8	2.64	2.85
31-Oct-16	650	25	23.4	3.65	85.4	0.8	2.64	2.85
01-Nov-16	840	25	23.4	4.21	98.4	0.3	3.83	3.91
02-Nov-16	840	25	23.4	4.21	98.4	1.25	2.64	2.96
07-Nov-16	840	25	23.4	4.21	98.4	1	2.95	3.21
07-Nov-16	840	25	23.4	4.21	98.4	1	2.95	3.21
07-Nov-16	840	25	23.4	4.21	98.4	1.25	2.64	2.96
08-Nov-16	1030	25	23.4	4.65	108.7	1.5	2.76	3.15
08-Nov-16	840	25	23.4	4.21	98.4	1	2.95	3.21
16-Nov-16	1850	25	23.4	5.91	138.2	1.75	3.71	4.16
17-Nov-16	1850	25	23.4	5.91	138.2	1.5	4.02	4.41
18-Nov-16	1850	25	23.4	5.91	138.2	1.75	3.71	4.16

Table A-2 – Experimental instantaneous ozone consumption and calculated IOD

Date	Total Flowrate (m^3/hr)	Untreated Water Flow (m^3/hr)	Residual Ozone (mg/L of total flow)	Instantaneous O_3 Consumption (mg/L of total flow)	Calculated IOD (mg/L)
28-Oct-16	3.942	1.662	0.05	0.4	1.12
31-Oct-16	3.588	1.308	0.05	0.45	0.96
01-Nov-16	3.57	1.29	0.05	0.15	1.38
02-Nov-16	3.87	1.59	0.1	0.56	1.08
07-Nov-16	6.054	3.774	0.025	0.33	1.84
07-Nov-16	4.392	2.112	0.05	0.47	1.42
07-Nov-16	3.744	1.464	0.1	0.66	1.03
08-Nov-16	5.598	3.318	0.1	0.56	1.64
08-Nov-16	3.69	1.41	0.1	0.52	1.13
16-Nov-16	6.48	5.64	0.025	0.205	3.23
17-Nov-16	6.48	5.64	0.025	0.165	3.50
18-Nov-16	6.48	5.64	0.025	0.205	3.23

Appendix B: Steady State Mass Balance Coefficient Data

Table B-1 - Full-scale single pass fish tank data (a' coefficient)

Full-Scale System - Single Pass Fish Tank				
Parameters	17-Nov	16-Nov	08-Nov	01-Nov
UVTin (%)	79.5	79.5	77.3	76.8
UVTfinal (%)	78	78.5	76.5	74.6
-ln UVTin	0.229	0.229	0.257	0.264
-ln UVTfinal	0.248	0.242	0.268	0.293
F (kg/d)	306	306	306	306
Qrecirc (m^3/d)	10996.8	10996.8	10996.8	10996.8
a' (m^3/kg)	0.685	0.455	0.374	1.044

Table B-2 - Full-scale single pass ozone contact chamber data (b' coefficient)

Full-Scale System - Single Pass Ozone Contact Chamber				
Parameters	17-Nov	16-Nov	08-Nov	01-Nov
UVTs (%)	78	78.5	76.5	74.6
UVT_{O3} (%)	83.3	83.5	80.3	78
UVT_R (%)	79.5	79.5	77.3	75.4
-ln(UVTs/100)	0.245	0.239	0.264	0.289
-ln(UVT_{O3}/100)	0.183	0.180	0.219	0.248
-ln(UVT_C/100)	0.243	0.239	0.264	0.289
-ln(UVT_R/100)	0.229	0.229	0.257	0.2821
Q_U (m^3/hr)	20.5	20.5	20.5	20.5
Qs (m^3/hr)	446	446	446	446
Qc (m^3/hr)	450	450	450	450
$Co_{3\ C}$ (g/m^3)	0.296	0.296	0.209	0.209
$Co_{3\ R}$ (g/m^3)	0	0	0	0
b' (m^3/g O_3)	0.046	0.032	0.033	0.032

Table B-3 - Experimental reactor single pass data (b' coefficient)

Experimental System - Single Pass					
Parameters	18-Nov	17-Nov	16-Nov	08-Nov	08-Nov
UVT_{O3} (%)	84.5	83.3	83.5	80.3	81.5
UVTs (%)	80.2	78	78.5	76.5	76.5
UVTfp (%)	81.6	79.5	79.3	79.5	79.9
$-\ln(UVT_{O3}/100)$	0.168	0.183	0.180	0.219	0.205
-ln(UVTs/100)	0.221	0.248	0.242	0.268	0.268
-ln(UVTip/100)	0.214	0.240	0.234	0.238	0.242
-ln(UVTfp/100)	0.203	0.229	0.232	0.229	0.224
Q_{O3} (m^3/hr)	0.84	0.84	0.84	2.28	2.28
Qsp (m^3/hr)	5.64	5.64	5.64	1.41	3.32
Qtp (m^3/hr)	6.48	6.48	6.48	3.69	5.6
Co_3 o (g/m^3)	1.75	1.5	1.75	1	1.5
Co_3 ip (g/m^3)	0.23	0.19	0.23	0.62	0.61
Co_3 fp (g/m^3)	0.025	0.025	0.025	0.075	0.05
b' (m^3/g O_3)	0.052	0.062	0.010	0.016	0.032

Table B-3 - continued

Experimental System - Single Pass					
Parameters	07-Nov	07-Nov	07-Nov	02-Nov	02-Nov
UVT_{O3} (%)	84.1	84	84.1	78.2	78.2
UVTs (%)	78.1	78.1	78.1	76.2	76.2
UVTfp (%)	83.5	82.9	81.4	79.5	78
$-\ln(UVT_{O3}/100)$	0.173	0.174	0.173	0.246	0.246
-ln(UVTs/100)	0.247	0.247	0.247	0.272	0.272
-ln(UVTip/100)	0.202	0.209	0.219	0.246	0.257
-ln(UVTfp/100)	0.180	0.188	0.206	0.229	0.248
Q_{O3} (m^3/hr)	2.28	2.28	2.28	2.28	2.28
Qsp (m^3/hr)	1.46	2.11	3.77	0	1.59
Qtp (m^3/hr)	3.74	4.39	6.05	2.28	3.87
Co_3 o (g/m^3)	1.25	1	1	1	1.25
Co_3 ip (g/m^3)	0.76	0.52	0.38	1	0.66
Co_3 fp (g/m^3)	0.075	0.025	0.025	0.3	0.05
b' (m^3/g O_3)	0.032	0.044	0.038	0.024	0.013

Table B-3 - continued

Experimental System - Single Pass						
Parameters	01-Nov	31-Oct	31-Oct	28-Oct	28-Oct	26-Oct
UVT_{O3} (%)	78	79.1	79.3	77.7	77.7	80.3
UVTs (%)	74.6	76.3	76.2	75.8	74.6	79
UVTfp (%)	77.4	80.1	78.6	77.3	78.9	81
$\ln(UVT_{O3}/100)$	0.248	0.234	0.232	0.252	0.252	0.219
ln(UVTs/100)	0.293	0.270	0.272	0.277	0.293	0.236
ln(UVTip/100)	0.265	0.234	0.246	0.263	0.252	0.227
ln(UVTfp/100)	0.256	0.222	0.241	0.257	0.237	0.211
Q_{O3} (m^3/hr)	2.28	2.28	2.28	2.28	2.28	2.28
Qsp (m^3/hr)	1.29	0	1.31	1.66	0	2.16
Qtp (m^3/hr)	3.57	2.28	3.59	3.94	2.28	4.44
Co_3 o (g/m^3)	0.3	0.8	0.8	0.8	0.6	0.8
Co_3 ip (g/m^3)	0.2	0.8	0.5	0.45	0.6	0.41
Co_3 fp (g/m^3)	0.05	0.1	0.05	0.05	0.1	0.075
b' (m^3/g O_3)	0.056	0.018	0.013	0.013	0.031	0.050

Curriculum Vitae

Candidate's full name: Matthew Trueman

Universities attended: B. Sc. In Chem. Eng., University of New Brunswick, 2015

Conference Presentations:

Trueman, M. A., Couturier, M. F., & Sorensen, M. (2017). Optimization and Control of Ozone Use within Recirculating Aquaculture Systems. Aquaculture Canada & Sea Farmers 2017 Conference. Halifax: Aquaculture Association of Canada.